M130 SEA-DOO RXT-X 2010 PLUG-IN ECU KIT

Sea-Doo® is a registered trademark of Bombardier Recreational Products Inc.

The M130 Sea-Doo RXT-X 2010 plug-in ECU kit is a fully programmable, direct replacement, for the factory fitted ECU.

No rewiring is necessary; the plug-in ECU plugs into the stock wiring harness using the original sensors and fuel system.

All essential functions are maintained, including stock dash display, iBR brake and Trim systems.

FEATURES

- Improved RPM limiting allows for higher top speed in rough water
- Programmable Launch Control to reduce cavitation
- Tunable fuel and ignition mapping for performance improvements
- Optional Knock Control for racing applications
- Optional exhaust lambda input via LTC or PLM for fuel tuning
- Level 1 data logging included in standard package price (predefined channels at up to 10Hz for diagnostic analysis)
- Level 2 logging available as upgrade (up to 100 channels at up to 200Hz, 120MB)
- Optional inputs for additional sensors, including:
  - Exhaust Collector Temperature (EGT) via TCA Thermocouple Amplifier
  - Exhaust Temperatures for Cylinders 1, 2 and 3 via TCA Thermocouple Amplifiers
  - Fuel Temperature
  - Jet Nozzle Pressure
  - Jet Nozzle Angle
  - Jet intake Pressure
  - Oil Temperature
  - Oil Pressure Sensor (switch is standard)
  - Trim Switch - allows for Fuel, Ignition, or Launch adjustments
  - G-Force (acceleration) - Longitudinal, Lateral, Vertical

COMPATIBILITY

2010 Sea-Doo RXT-X 260 and 260iS onward and 2012 RXP-X.

KIT CONTENTS

ECU

13130M – M130 Marine ECU

Installation Set

61228 – Adaptor Loom
41212 – IGN4 Ignition Module
66002 – Waterproof Relay

Mounting Set

85323 – Seadoo 2010 M130 Mounting Plate
85322 – Seadoo 2010 M130 Backing Pad
85288/85289 - Anti-vibration Mounts
Nylock Nuts and Stainless Steel Washers
Mounting Screws

ECU DIMENSIONS

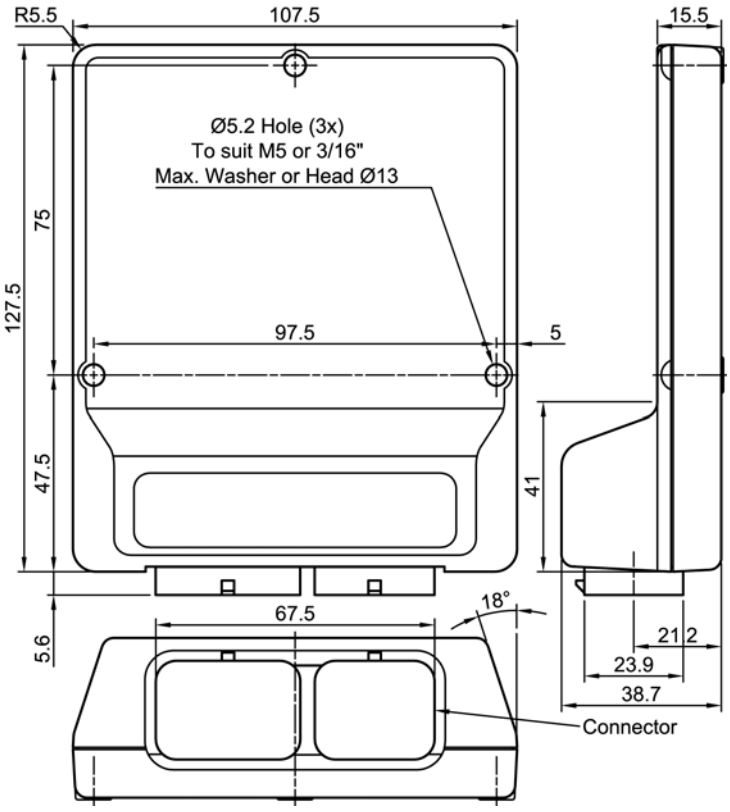

MOUNTING

The M130 Marine ECU replaces the factory ECU fitted on top of the engine.

Before fitting the M130 ECU, remove the factory ECU (three T25 Torx screws).

1. Assemble the supplied mounting plate as shown in the following image and described below.

   (a) With the Mounting Plate right way up (studs pointing up), insert the three rubber bushes into the three corresponding holes.
   (b) Invert the Mounting Plate (studs pointing down), place the three rubber rings over the 3 protruding rubber bushes.

2. With Mounting Plate right way up (studs pointing up), position the Mounting Plate onto the plastic manifold casting on the PWC.
3. Firmly fix the Mounting Plate using 2 x 6mm cap screws with washers in the 2 corner positions, and 1 x countersunk screw **without** washer in the central position.
   Do not over-tighten screws.
4. Place the rubber mat over the 3 mounting studs. The centre hole in the mat should be positioned over the centre countersunk screw.
5. Fit the M130 ECU over the 3 mounting studs and secure with 3 x 5mm stainless washers and 3 x 5mm Nylock nuts.
   Do not over-tighten. See following image of completed mounting.

6. To ensure correct connection, plug the stock wiring harness into the Adaptor Loom **in the following order**:
   (a) Plug A (grey face) from the stock harness.
   (b) Plug B (black face) from the stock harness.
   ➤ *Plug A and B on the stock harness*

7. Plug the Adaptor Loom into the M130.
8. Ensure all supplied devices are connected. That is – the M130, IGN4 Ignition Module and Waterproof Relay.
9. Using zip-ties, secure devices as required.

⚠ The M130 ECU **must** have the relevant firmware package loaded **before** the Adaptor Loom is powered up. If you have not loaded the package you should unplug the IGN4 Ignition Module and remove all three injector/ignition fuses (numbered 7, 8, and 9) from Fuse Box 1. Only **after** unplugging the ignition module and removing the fuses, load the M130 package.

ADAPTER LOOM COMPATIBILITY

Sea-Doo RXT-X models from 2010 onward differ from the 2004-2009 models as they use Electronic Throttle Control (Drive-by-Wire) and offer brake and suspension options.

MoTeC provides Adapter Looms with the two MoTeC PWC Kits for the M400 family of ECUs; these are **not** interchangeable. Likewise, the M130 Adapter Loom is **not** interchangeable with either of the 2004-2009 Adaptor Looms.

OPERATIONAL DIFFERENCES

The M130 Seadoo RXT-X 2010 plug-in ECU closely mimics the standard OEM operation. However, MoTeC draws your attention to some operational differences when the M130 Seadoo RXT-X 2010 plug-in ECU is installed.

- The M130 Marine ECU engine control functionality is less complex than the standard factory ECU; only one mode is supported. The handlebar Mode switching does not operate as in the stock craft.
- The iBR system works in conjunction with the Brake Lever, M130 Marine ECU and Instrument Cluster to determine how the brake will operate. The interaction is complex and not user-adjustable. If for any reason the iBR unit is not satisfied with data received from the other components, the red iBR Warning Light will illuminate and the brake system will no longer operate. If this occurs, the craft must be shut down by stopping the engine, removing the Ignition Lanyard and waiting for 10 seconds before re-inserting the Ignition Lanyard and re-starting the engine.
- The M130 Marine ECU will control the Sea-Doo Instrument Cluster and mimic the original factory dash operation. The ECU controls the dash via CAN. The CAN transmit settings and the CAN custom data set are not user-adjustable. Also, the dash alarms are not user-adjustable – they are pre-set in the dashboard. The M130 provides relevant sensor information (for example, engine temperature Etc.) and the dashboard raises alarms as required. Hence, all dash alarms will operate identically to the stock ECU.
- The standard Sea-Doo 2010 models use an Ignition Lanyard with an immobiliser function to power up the craft. This causes a cumbersome start procedure where the Start button must be pressed before the Ignition Lanyard is inserted, then waiting for a double-beep to indicate that the Jet Ski will start. The M130 Sea-Doo RXT-X 2010 plug-in ECU solution does not have the same requirement. Once the Ignition Lanyard is inserted, the Start/Stop button will work at any time; no double-beep indication is given by the dash.
- Power control functions:
  – Power is continuously applied to the ECU while the Ignition Lanyard is connected. Tuning adjustments, log downloads, and ECU configuration file downloads may all be performed without interruption.
  – Power is removed from the ECU only by removing the Ignition Lanyard.
  – There is no automated power-down function. **For this reason, and if there is no further work required on the ECU, always remove the Ignition Lanyard immediately after stopping the engine**.

PIN-OUT

M130 Connector A — 34 way

Pin Number	Designation	Full Name	OE Pin	Function	Description
A01	OUT_HB2	Half Bridge Output 2	AL1	Throttle Servo Output	Motor +
A02	SEN_5V0_A	Sensor 5.0V A	AK4, AB4, BJ3, BK1	5V for Splice Saver X1	Supply for Throttle, MAP, Throttle Lever
A03	IGN_LS1	Low Side Ignition 1	D03	IGN4 Channel 3	
A04	IGN_LS2	Low Side Ignition 2	D02	IGN4 Channel 2	
A05	IGN_LS3	Low Side Ignition 3	D01	IGN4 Channel 1	
A06	IGN_LS4	Low Side Ignition 4	Not Used		
A07	IGN_LS5	Low Side Ignition 5	Not Used		
A08	IGN_LS6	Low Side Ignition 6	Not Used		
A09	SEN_5V0_B	Sensor 5.0V B	AF4	5V for Tip-Over Switch	
A10	BAT_NEG1	Battery Negative	BF2, BL1, BM2, L01	Ground via Splice Saver X2	Vehicle Ground - DESS, Power, and LTC Ground
A11	BAT_NEG2	Battery Negative	BM3,R85,R87	Ground via Splice Saver X3	Vehicle Ground
A12	IGN_LS7	Low Side Ignition 7	Not Used		
A13	IGN_LS8	Low Side Ignition 8	K03	Ignition Knock Window Output	SKM Knock Window
A14	AV1	Analogue Voltage Input 1	AF3	Throttle Servo Position Main	
A15	AV2	Analogue Voltage Input 2	AG4	Inlet Manifold Pressure	
A16	AV3	Analogue Voltage Input 3	AK3	Throttle Servo Position Tracking	
A17	AV4	Analogue Voltage Input 4	BA3	Throttle Lever Tracking	
A18	OUT_HB1	Half Bridge Output 1	AL2	Throttle Servo Output	Motor –
A19	INJ_PH1	Peak Hold Injector 1	AB3	Fuel Cylinder 1 Output	
A20	INJ_PH2	Peak Hold Injector 2	AK1	Fuel Cylinder 2 Output	
A21	INJ_PH3	Peak Hold Injector 3	AJ1	Fuel Cylinder 3 Output	
A22	INJ_PH4	Peak Hold Injector 4	Not Used		
A23	INJ_LS1	Low Side Injector 1	BE4,BH2	Power Relay Drive and lanyard low side.	Not driven in this application
A24	INJ_LS2	Low Side Injector 2	BL4	Starter Motor Relay Output	
A25	AV5	Analogue Voltage Input 5	BE1	Throttle Lever Main	
A26	BAT_POS	Battery Positive	BM4,L04,V02	Switched Supply	Supply for ECU, LTC, Boost Solenoid
A27	INJ_PH5	Peak Hold Injector 5	Not Used		
A28	INJ_PH6	Peak Hold Injector 6	Not Used		
A29	INJ_PH7	Peak Hold Injector 7	Not Used		
A30	INJ_PH8	Peak Hold Injector 8	Not Used		
A31	OUT_HB3	Half Bridge Output 3	V01	Boost Solenoid Output	Option - not in standard Package
A32	OUT_HB4	Half Bridge Output 4	R86	Fuel Pump Output	
A33	OUT_HB5	Half Bridge Output 5	Not Used		
A34	OUT_HB6	Half Bridge Output 6	Not Used		

M130 Connector B — 26 way

Pin Number	Designation	Full Name	OE Pin	Function	Description
B01	UDIG1	Universal Digital Input 1	AH1	Engine Speed	Crankshaft Position
B02	UDIG2	Universal Digital Input 2	AE2	Engine Synchronisation	
B03	AT1	Analogue Temperature Input 1	AH3	Inlet Manifold Temperature	
B04	AT2	Analogue Temperature Input 2	AA1	Coolant Temperature	
B05	AT3	Analogue Temperature Input 3	AH4	Muffler Temperature	
B06	AT4	Analogue Temperature Input 4	Not Used		
B07	KNOCK1	Knock Input 1	K02	Ignition Knock Sensor	SKM Knock Signal
B08	UDIG3	Universal Digital Input 3	Not Used		
B09	UDIG4	Universal Digital Input 4	AG1	Vehicle Tip Over Switch	
B10	UDIG5	Universal Digital Input 5	AE3	Oil Pressure Low Switch	
B11	UDIG6	Universal Digital Input 6	BH1	Steering Lock Switch	
B12	BAT_BAK	Battery Backup	Not Used		
B13	KNOCK2	Knock Input 2	Not Used		
B14	UDIG7	Universal Digital Input 7	BD1	Engine Start Stop Button	
B15	SEN_0V_A	Sensor 0V A	AG2,K01	0V for SKM, Knock Sensor	
B16	SEN_0V_B	Sensor 0V B	BK3, BH3, BB3, AA2, AC4, AD4, AH2, AJ2, AK2, AJ3, AJ4	0V for Splice Saver X5	
B17	CAN_HI	CAN Bus 1 High	BC1, L03	500k vehicle CAN bus to Dash, Brake	
B18	CAN_LO	CAN Bus 1 Low	BC2, L02	500k vehicle CAN bus to Dash, Brake	
B19	SEN_6V3	Sensor 6.3V	K04	SKM Supply	
B20	AV6	Analogue Voltage Input 6	Not Used		
B21	AV7	Analogue Voltage Input 7	Not Used		
B22	AV8	Analogue Voltage Input 8	M02	Boost Pressure	Option - not in standard Package
B23	ETH_TX+	Ethernet Transmit+	Ethernet Green/White		
B24	ETH_TX-	Ethernet Transmit-	Ethernet Green		
B25	ETH_RX+	Ethernet Receive+	Ethernet Orange/White		
B26	ETH_RX-	Ethernet Receive-	Ethernet Orange		
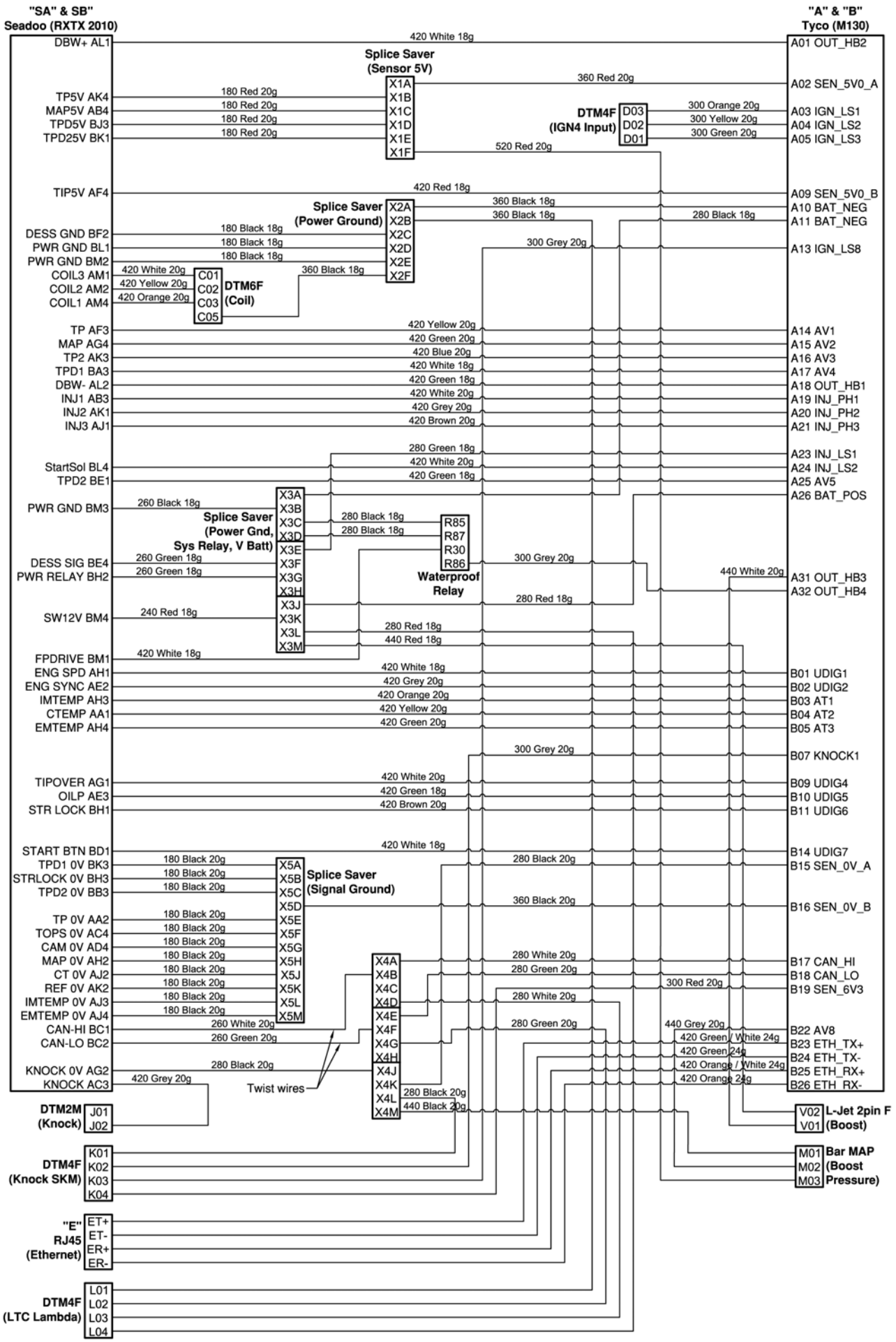
WIRING SCHEMATIC