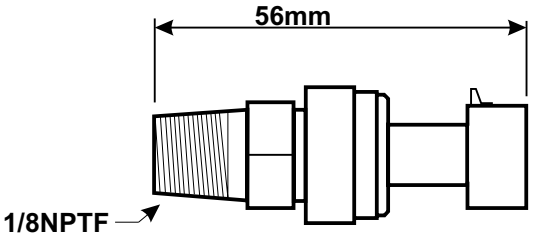

MoTeC 689 KPA (100 PSI) Absolute Part Number 58031
MoTeC Connector Part Number 65013

Top view of sensor

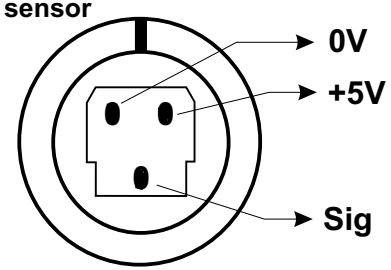

ADL / ADL2 / SDL Setup

Channel Assignments
Assign the pressure Channel to the appropriate pin

Sensor Calibration
Press "Select" and choose a calibration file that suits your needs. For example:
TI 0-100 PSIG.C1P = PSI Gage calibration

M800 / M880 Setup

Note: M800 Version 3.3 + software Use the ADL calibration method

Parameter	Display as KPA
Sensor Calibration	-69
0 Pressure AD Value	101
Pressure / AD Value	1250 / 1590
Use interpolate function to complete table values	

M4 / M4-8 Setup

(DISPLAY IN KPA)

Parameter / PIN	Aux Temp	Aux Volt
Sensor Calibration	-4	-3
0 Pressure AD Value	102	
*Pressure / AD Value	720 / 963	
Use interpolate function to complete table values		

*** AD values at higher pressures must increase by a value of 4. See the ECU help files for further information.**

NOTE 1:
+ 5V Pins are 18, 28, 44
0V Pins are 17, 27, 33, 40, 43
Analog Volt Input Pins are 1, 2, 3, 4, 5, 19, 20, 21, 22, 23, 24, 25, 26, 45, 46, 47, 48, 49, 50

NOTE 2:
M4 and M4-8 input pins are 17 & 18

NOTE 3:	M800	M880
+5V ENG Pin	A2	16
+5V AUX Pin	A9	34
0V ENG Pin	B16	27
0V AUX Pin	B15	11
Analog Volt Input Pins	A15, A16, A17, A25 B20, B21, B22	18, 6, 7, 12 36, 35, 44

NOTE 4:
SDL AV input pins are 1,2,15,16,17,18,19,20

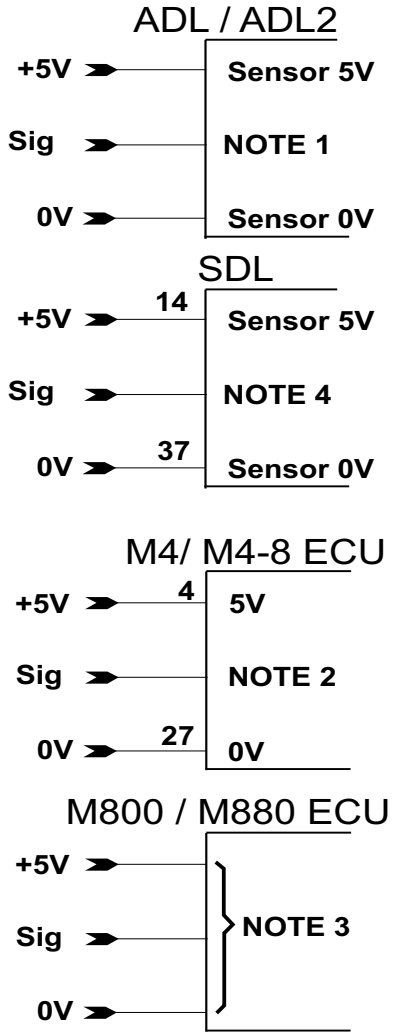

MoTeC	Title TI PRESSURE SENSORS				Sheet No	Drawing No
	Date 05/12/2006	Drawn ST	App	Products ADL, ECU	2 of 5	X30