4 PORT BOOST CONTROL VALVE

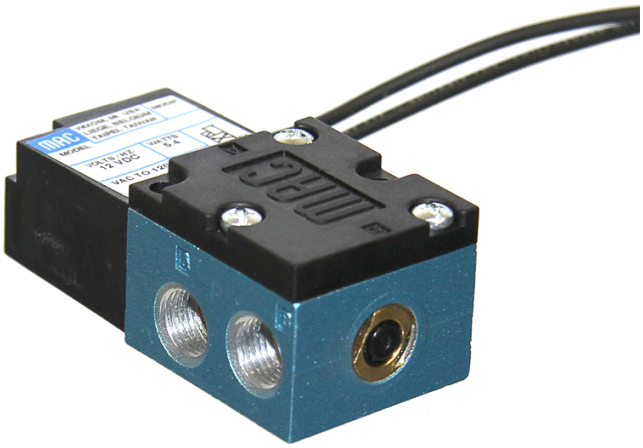

This device is commonly used for turbo wastegate control. It may be used with conventional single port wastegates, and additionally can control dual port wastegates that offer positive actuation in both directions.

MOUNTING AND DIMENSIONS

All measurements are in mm.

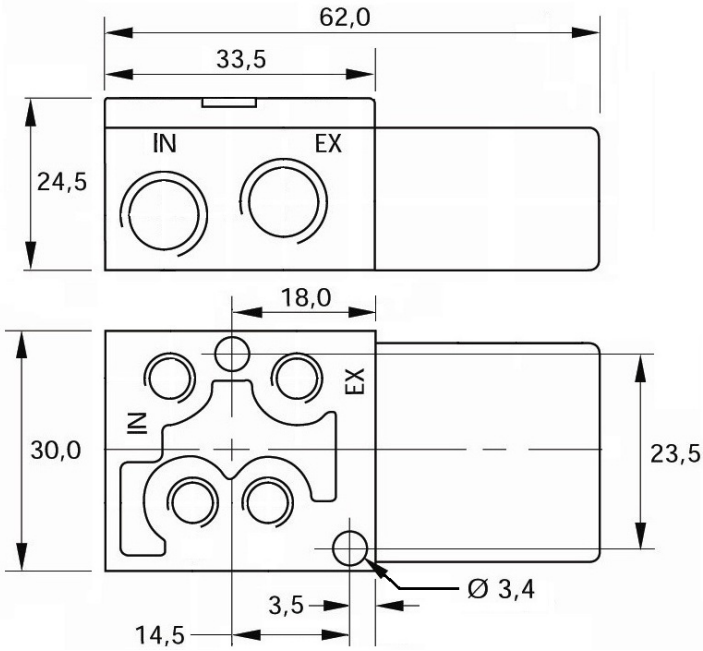
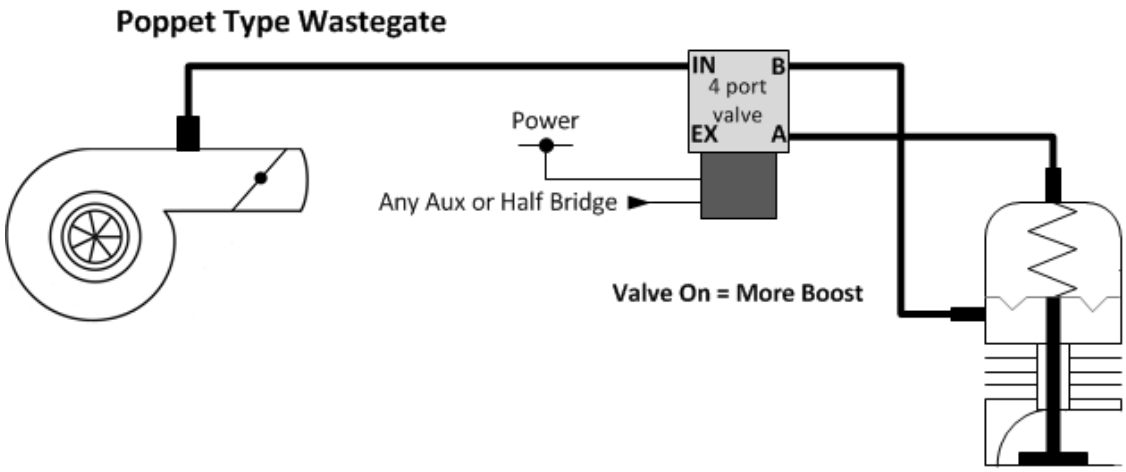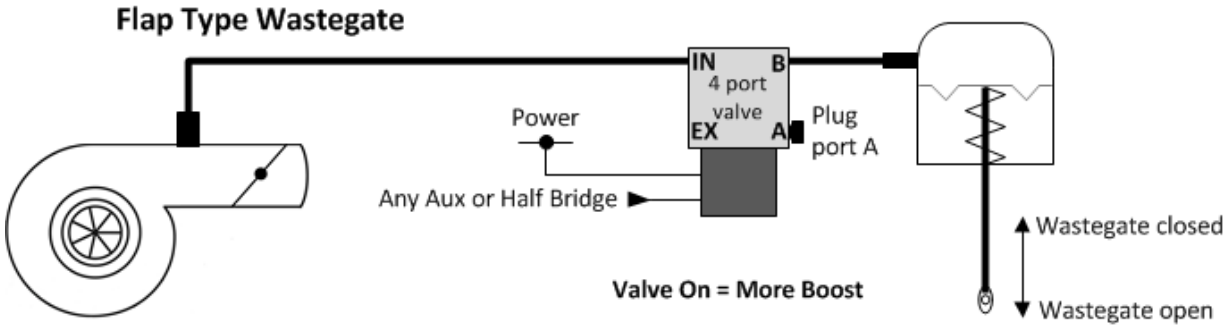
WASTEGATE APPLICATION