M130 SKI-DOO 1200XS 2016 PACKAGE

This Package, used with an activated M130 ECU, is a fully programmable replacement for the factory-fitted Ski-Doo 1200XS ECU.

FEATURES

- Fully integrates with these original systems: port injection, reverse, starting, emergency stop, lanyard, mode up/down, dash, headlight control, accessory relay. **Lambda control is supported with optional LTC and Bosch LSU4.9 sensor**.
- Pre-configured sensor calibrations for Original Equipment (OE) sensors and engine triggers.
- Pre-configured control of primary (Port Injector) fuel system.
- Optionally configurable secondary (Port Injector) fuel control with a tuneable balance table.
- Pre-configured reference mode for engine synchronisation.
- Pre-configured physical settings for engine displacement, fuel density, stoichiometric ratio, fuel pressure, and primary injector linearisation, which allow for simplified engine start-up prior to tuning.
- Pre-configured CAN messaging for OE systems including dashboard.
- Pre-configured control of OE coolant fan with temperature thresholds.
- Pre-configured transient fuelling compensation using physical modelling of fuel film for port injectors.
- Idle closed loop control system using ignition and drive by wire actuation.
- Pre-configured track speed detection via CAN from OE dash system, allowing gear detection via engine speed / wheel speed estimate.
- Pre-configured on-board knock control for each cylinder using the OE knock sensor (optionally can be configured to use up to 2 sensors) and selectable centre frequency.
- Configurable boost control with single wastegate actuator. Single and dual solenoids supported.
- Configurable anti-lag for single turbo variants with ignition timing limit, fuel volume trim, ignition cut, fuel cut, engine speed limit, boost aim and throttle aim tables.
- GPS acquisition and logging via CAN or RS232.
- Intercooler temperature and spray control.
- Lap distance, time and number via BR2 or switched input, with split and sector options.
- Support of MoTeC devices: ADR, E8XX, PDM, SLM, VCS.
- Supports switchable inlet manifold runner with position feedback.
- Coolant pump output with PWM control.
- Coolant pump after-run functionality, optionally with additional pump output.
- Configurable launch control with tables.
- Configurable closed loop alternator system for PWM field winding control.
- Race time system with tables for ignition timing trim, fuel mixture aim, boost limit, and throttle limit.
- Engine Load Average channel with tables for engine speed limit, ignition timing trim, fuel mixture aim, boost limit, and throttle limit.

- Engine run time total for engine hour logging.
- Configurable security for multiple users with differing access options.
- ECU CAN Receive from a defined ID base address for data reception from MoTeC devices.
- Vehicle speed limiting (pit speed control).
- 7 configurable driver switches and 7 rotary switches each with 9 positions that can be simultaneously mapped to launch control, pit switch, anti-lag, traction, race time reset, engine speed limit maximum, throttle lever translation, fuel volume trim, ignition timing, fuel mixture aim, boost limit, traction aim, and traction control range.
- Pulsed tachometer output with configurable output pin and scaling.
- Transmission pump output with transmission temperature threshold and hysteresis control.
- Traction control with tables for aim main, aim compensation, control range.
- Optional channels for additional sensors via input pin and/or CAN message, including:
  - Airbox Mass Flow, Temperature and Pressure
  - Ambient Pressure and Temperature
  - Boost Pressure
  - Brake Pressure Front and Rear
  - Brake Switch
  - Coolant Pressure and Temperature
  - Engine Oil Pressure and Temperature
  - Engine Crankcase Pressure
  - Exhaust Pressure
  - Exhaust Temperature (EGT) via TCA Thermocouple Amplifier, Generic CAN, or E888 for Collector and Cylinders 1 to 3.
  - Exhaust Lambda via LTC, LTCN, or PLM for Collector and Cylinders 1 to 3.
  - Fuel Pressure and Temperature
  - Fuel Tank Level
  - Intercooler Temperature
  - Steering Angle
  - Transmission Temperature
  - Turbocharger Speed
  - G-Force (acceleration) - Longitudinal, Lateral, Vertical
  - Track Speed

LICENCING

To load the Package onto the ECU, the **M1 Licence: Ski-Doo 1200XS 2016** (part number 23047) is required.

VEHICLE COMPATIBILITY

This product includes CAN messaging for full OE vehicle integration. It caters for OE vehicle systems such as reversing, starting, emergency stop and lanyard stop, and dashboards.

OPERATION

When the M130 ECU is installed according to the included wiring pinout, this Package mimics most aspects of OE operation as follows:

Start System

Start procedure should be identical to the OE installation.

Reversing

Reversing procedure should be identical to the OE installation.

Mode Switching

The Mode Up and Mode Down buttons may be used in a number of ways to control vehicle functions. The M1 Package settings currently allow for two Mode values, and use these two Mode switch values to control Engine Speed Limit Maximum, Throttle Lever Translation, Ignition Timing, Fuel Mixture Aim, and Engine Boost Limit.

Mode Switch	Engine Speed Limit	Throttle Lever Translation	Ignition Timing Main	Fuel Mixture Aim Trim	Engine Boost Limit
Zero	8850	Full throttle range	Timing Map A	0%	100%
One	8800	Reduced throttle range (60%)	Timing Map B	-3%	60%

Power Switching, Emergency Stop, and Lanyard

Vehicle power is switched on by connecting the lanyard (named Tether Cord or Engine Cut-Off Switch in OE manuals) and pressing the start button.

The start button provides temporary power to the M1 ECU which then turns on the ECU Power relay.

The ECU power relay will remain turned on depending on the engine run state and the lanyard, along with M1 Package settings which may be adjusted to suit.

Note: as the M1 ECU controls the ECU power relay, some Tune operations which require an ECU reset will therefore turn off the ECU power relay. Further information below.

If the Emergency Engine Stop Switch is in the On position (Pulled up) the engine will crank and start when the start button is pressed.

When the engine is running, removing the lanyard or pushing down the emergency engine stop switch will stop the engine. Power to the ECU is maintained depending on the M1 Package settings:

Ski-Doo Lanyard Power Hold Mode

This determines how the ECU powers off after the engine stops. Holding power for longer can help in race conditions when the ski needs to crank and start without the delay used on initial power up. This can be dangerous in normal use where the ECU remains powered and flattens the battery.

Ski-Doo Lanyard Power Hold Mode	Behaviour
Disabled	ECU will power down in Power Hold Time after the engine stops.
Extended	ECU will power down in Lanyard Extended Power Hold Time after the engine stops while the lanyard is connected.
Enabled	The ECU will never power down while the lanyard is connected.

Power Operation when Sending Packages

As described above the M1 ECU controls the ECU power relay. Some Tune operations which require an ECU reset will therefore turn off the ECU power relay.

Package settings which require a reset

M1 Tune displays an icon next to Package settings which will require an ECU reset.

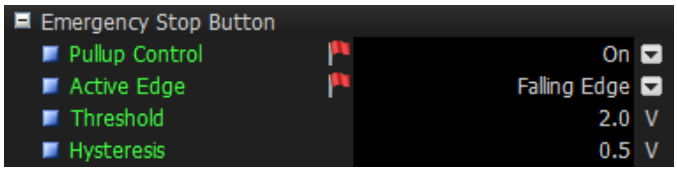

In the above example, changing Pullup Control or Active Edge settings will require an ECU reset, while changing Threshold or Hysteresis will not.

Normal Operation: when saving a Package with altered settings where a reset is not required, ECU power will be maintained and no special actions are required.

Sending a complete Package, or saving a Package where a reset is required: As a reset is required, the ECU power relay will turn ofF and power will be lost. To ensure continuity of power while the M1 ECU is not controlling the ECU power relay:

1. Push the Emergency Engine Stop Switch down, into the Off position
2. Hold the Start button down for the entire duration of the package send process. The start button provides temporary power to the M1 ECU.
3. Once the package has been sent, release the Start Button
4. To run the engine, pull up the Emergency Engine Stop Switch in to the On position and start as normal.

Updating Firmware or system files: Follow the same procedure as above.

ECU WIRING

If the optional 61281 – M130 Ski-Doo Adaptor Loom is used, no rewiring is necessary. The optional loom plugs into the stock wiring harness using the original sensors and fuel system. All original functions are maintained.

If the Ski-Doo 1200XS kit is purchased, the following Additional components are supplied for a complete solution:

- 13130M – M130 Marine ECU
- 61281 – Adaptor Loom
- 41212 – IGN4 Ignition driver
- 66002 – Waterproof Relay

PINOUT - M130 CONNECTOR A - 34 WAY

Mating Connector: Tyco Superseal 34 Position Keying 1 (MoTeC #65044)

Pin	Designation	Full Name	OE Pin	Function
A01	OUT_HB2	Half Bridge Output 2	AL1	Throttle Servo Motor Output
A02	SEN_5V0_A	Sensor 5.0V A	AK4, AB4, BJ3, BK1, M03	
A03	IGN_LS1	Low Side Ignition 1	AM4	Ignition Cylinder 1 Output
A04	IGN_LS2	Low Side Ignition 2	AM2	Ignition Cylinder 2 Output
A05	IGN_LS3	Low Side Ignition 3	AM1	Ignition Cylinder 3 Output
A06	IGN_LS4	Low Side Ignition 4	BL3	Ski-Doo Reverse Disengage Output
A07	IGN_LS5	Low Side Ignition 5	BF1	Ski-Doo Reverse Engage Output
A08	IGN_LS6	Low Side Ignition 6	BG1	Ski-Doo Headlight Relay Output
A09	SEN_5V0_B	Sensor 5.0V B	T03	5V supply for Trim Switch
A10	BAT_NEG1	Battery Negative	BL1, BM2, BF2, L01, C05	
A11	BAT_NEG2	Battery Negative	BM3, R85, R87	
A12	IGN_LS7	Low Side Ignition 7	BJ2	Ski-Doo Accessory Relay Output
A13	IGN_LS8	Low Side Ignition 8		
A14	AV1	Analogue Voltage Input 1	AF3	Throttle Servo Position Sensor Main
A15	AV2	Analogue Voltage Input 2	AG4	Inlet Manifold Pressure Sensor
A16	AV3	Analogue Voltage Input 3	AK3	Throttle Servo Position Sensor Tracking
A17	AV4	Analogue Voltage Input 4	BA3	Throttle Lever Sensor Main
A18	OUT_HB1	Half Bridge Output 1	AL2	Throttle Servo Motor Output
A19	INJ_PH1	Peak Hold Injector 1	AB3	Fuel Cylinder 1 Primary Output
A20	INJ_PH2	Peak Hold Injector 2	AK1	Fuel Cylinder 2 Primary Output
A21	INJ_PH3	Peak Hold Injector 3	AJ1	Fuel Cylinder 3 Primary Output
A22	INJ_PH4	Peak Hold Injector 4		
A23	INJ_LS1	Low Side Injector 1	BH2, BE4	ECU Power Relay Output
A24	INJ_LS2	Low Side Injector 2	BL4	Ski-Doo Start Relay Output
A25	AV5	Analogue Voltage Input 5	BE1	Throttle Lever Sensor Tracking
A26	BAT_POS	Battery Positive	BM4	ECU Battery Voltage
A27	INJ_PH5	Peak Hold Injector 5		
A28	INJ_PH6	Peak Hold Injector 6		
A29	INJ_PH7	Peak Hold Injector 7		
A30	INJ_PH8	Peak Hold Injector 8	BC3	Brake Light Output
A31	OUT_HB3	Half Bridge Output 3	V01	Boost Actuator Output
A32	OUT_HB4	Half Bridge Output 4	BM1	Fuel Pump Output
A33	OUT_HB5	Half Bridge Output 5	AC1	Reverse Relay Output
A34	OUT_HB6	Half Bridge Output 6		

PINOUT - M130 CONNECTOR B - 26 WAY

Mating Connector: Tyco Superseal 26 Position Keying 1 (MoTeC #65045)

Pin	Designation	Full Name	OE Pin	Function
B01	UDIG1	Universal Digital Input 1	AH1	Engine Speed Sensor
B02	UDIG2	Universal Digital Input 2	AE2	Engine Synchronisation Sensor
B03	AT1	Analogue Temperature Input 1	AH3	Inlet Air Temperature Sensor
B04	AT2	Analogue Temperature Input 2	AA1	Coolant Temperature Sensor
B05	AT3	Analogue Temperature Input 3	BD3	Driver Mode Up Switch
B06	AT4	Analogue Temperature Input 4	BE3	Driver Mode Down Switch
B07	KNOCK1	Knock Input 1		Knock Sensor 1
B08	UDIG3	Universal Digital Input 3	BC4	Ski-Doo Emergency Stop Button
B09	UDIG4	Universal Digital Input 4	BC3	Ski-Doo Lanyard Switch
B10	UDIG5	Universal Digital Input 5	AE3	Engine Oil Pressure Low Switch
B11	UDIG6	Universal Digital Input 6	BH3	Ski-Doo Reverse Engaged Switch
B12	BAT_BAK	Battery Backup		
B13	KNOCK2	Knock Input 2		Knock Sensor 1
B14	UDIG7	Universal Digital Input 7	BD1	Ski-Doo Start Button
B15	SEN_0V_A	Sensor 0V A	T01	
B16	SEN_0V_B	Sensor 0V B	BK3, BH1, BB3, M01, AA2, AD4, AH2, AJ2, AK2, BA1	
B17	CAN_HI	CAN Bus 1 High	BC1, L03	
B18	CAN_LO	CAN Bus 1 Low	BC2, L02	
B19	SEN_6V3	Sensor 6.3V		
B20	AV6	Analogue Voltage Input 6		
B21	AV7	Analogue Voltage Input 7	T02	Driver Trim Switch
B22	AV8	Analogue Voltage Input 8	F02	Fuel Pressure Sensor
B23	ETH_TX+	Ethernet Transmit+	Ethernet Green/White	
B24	ETH_TX-	Ethernet Transmit-	Ethernet Green	
B25	ETH_RX+	Ethernet Receive+	Ethernet Orange/White	
B26	ETH_RX-	Ethernet Receive-	Ethernet Orange	
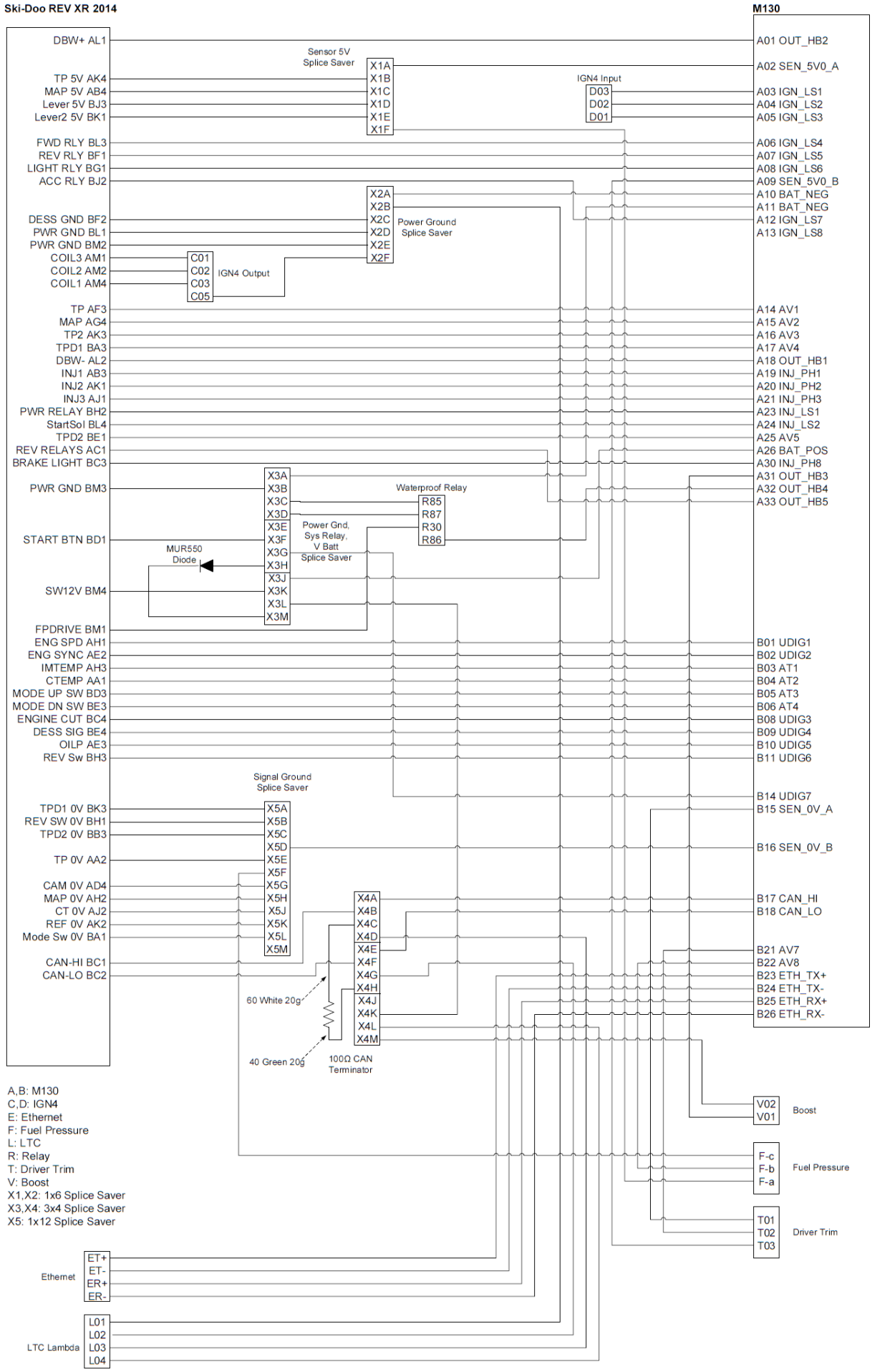
ADAPTOR LOOM WIRING SCHEMATIC