Vehicle Installation Notes

Document Number		DVIN0002	
Title		Toyota ZZE-123 Corolla	
Approved By			
Revision	Date	Prepared By	Change History
1	01/12/2004	MM	

Introduction

This document outlines the installation of an M400 ECU into a 2003 ZZE-123R Corolla Sportivo. The car was a GT Production car so the original loom must remain basically as it came from the factory. The installation was done in Piggy-back due to the body control functions of the factory ECU; it is also recommended that a similar setup is used on a road car.

Vehicle Details

Make: Toyota

Model: Corolla Sportivo

Body Code: ZZE-123R

Year: 2004

Engine: 2ZZ-GE 1.8lt VVTLi (variable inlet cam timing and lift)

Injectors: 14ohm, part number 23250-22030 (yellow)

Firing Order: 1,3,4,2

Parts required

Quantity	Description	Part Number	Notes
1	M400 ECU	13004	
1	34 pin M800 connector	65044	
1	26 pin M800 connector	65045	
4	12 pin DTM Female	68058	
3	12 pin DTM Male	68059	
1	M400/600/800 car cable	61037	
1	6 pin DTM (F)	68056	external Lambda
1	LSU Sensor	57004	

M800 Start up file

Available from the Intranet – Toyota 2ZZ Corolla Start up.e21

© Copyright – *MoTeC* Pty Ltd
Reproduction in whole or in part is prohibited without written approval from *MoTeC* Pty Ltd.

ECU Wiring

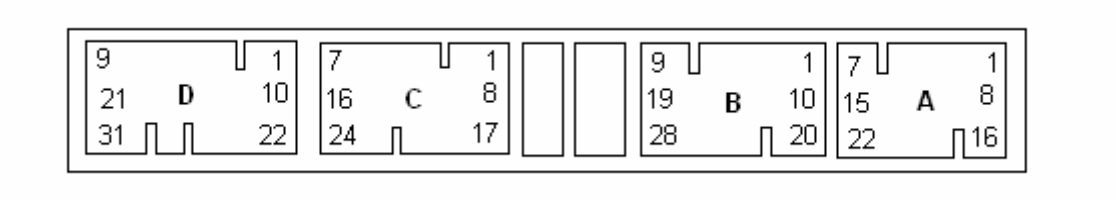

A Connector

M800 pin	OEM	Description	Comments	Wire Colour
A1	C6	AUX 2	VARIABLE CAM LIFT (CUT)	ORANGE
A2		5V ENGINE		
A3	D10	IGN 1	CYLINDER 1 (CUT)	VIOLET
A4	D12	IGN 2	CYLINDER 3 (CUT)	BLUE
A5	D13	IGN 3	CYLINDER 4 (CUT)	GREY
A6	D11	IGN 4	CYLINDER 2 (CUT)	GREEN
A7		IGN 5		
A8		IGN 6		
A9				
A10	D31	GROUND	SPLICE	BLACK
A11	D21	GROUND	SPLICE	BLACK
A12		8V ENGINE POWER		
A13		8V AUX POWER	CAN CONNECTOR	RED
A14	C23	AV1	TPS (SPLICE)	GREEN
A15	C11	AV2	MAF (SPLICE)*	ORANGE
A16	C14	AV3	ET (SPLICE)	VIOLET
A17	C22	AV4	AT (SPLICE)	GREY
A18	D23	AUX 1	VARIABLE CAM TIMING (CUT)	YELLOW
A19	D1	INJ 1	CYLINDER 1 (CUT)	BROWN
A20	D3	INJ 2	CYLINDER 3 (CUT)	WHITE
A21	D4	INJ 3	CYLINDER 4 (CUT)	YELLOW
A22	D2	INJ 4	CYLINDER 2 (CUT)	VIOLET
A23	D18	AUX 3	IDLE CONTROL (CUT)	BLUE
A24	EXT	AUX 4	LAMBDA HEATER	WHITE
A25		AV 5		
A26	A1/C7/D24	12V POWER	+EXT LAMBDA (SPLICE)	RED
A27		INJ 5		
A28		INJ 6		
A29		INJ 7		
A30		INJ 8		
A31		AUX 5		
A32		AUX 6		
A33		AUX 7		
A34		AUX 8		

D9

M800 PIN	CAN PIN	DESCRIPTION
B14	1	OV COMMS
B23	5	CAN HI
B24	4	CAN LO
A13	3	8V AUX POWER

B CONNECTOR

M800 pin	OEM	DESCRIPTION	COMMENTS	Wire Colour
B1	C16	REF	36-2 MAG (SPLICE)	WHITE
B2	C15	SYNC	4+1 MAG (SPLICE)**	WHITE
B3		AT 1		
B4		AT 2		
B5		AT 3		
B6		AT 4		
B7		AT 5		
B8		DIG 1		
B9		DIG 2		
B10		DIG 3		
B11		DIG 4		
B12		LA2S		
B13		LA2P		
B14		0V COMMS	CAN CABLE	BLACK
B15	EXT	0V AUX POWER	EXT LAMBDA	YELLOW
B16	C18	0V ENGINE	0V (SPLICE)	BLACK
B17		RS232 TX		
B18		RS232 Rx		
B19		AT 6		
B20		AV 6		
B21	34	AV 7		
B22	35	AV 8		
B23		Can HI	CAN CABLE	WHITE
B24		Can LO	CAN CABLE	GREEN
B25	EXT	LA1S	LAMBDA	BLACK
B26	EXT	LA1P	LAMBDA	RED

*No calibration for the MAF was available at the time of writing.

**Sync sensor needs to be assigned to Cam Position as well.

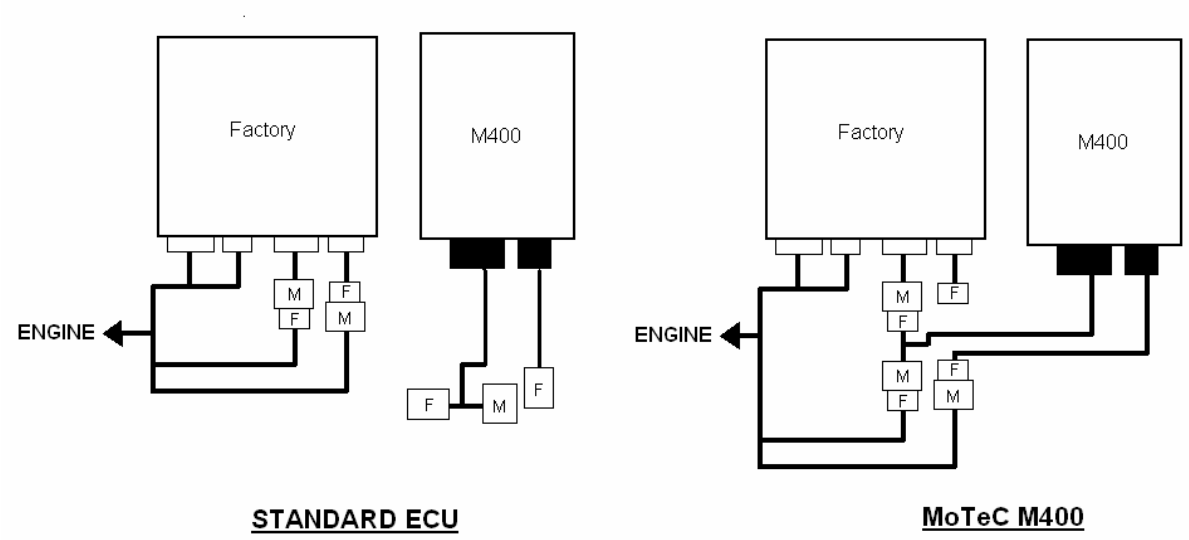

The diagram above shows the connection instructions for adding the M400 loom into the modified factory loom, the external lambda is not shown in this view. The "T" part of the M400 loom contains all the spliced connections and the other connector is for the cut wires (injectors, ignition, cam control etc).

Sensor Calibration

The sensors that needed to be calibrated were the air temperature and coolant temperature. It must be noted that the air and water sensor calibrations below are for sensors piggy-backed into AV inputs on an M800. Resistive circuit type sensors (temperature sensors usually) cannot be spliced into AT inputs due to the internal pull-up resistor in the M800, splicing into an AV eliminates this problem although a custom calibration has to be made with the sensor attached to the complete vehicle loom.

Air Temp Calibration (AV piggy-back)

Temp	-50	-40	-30	-20	-10	0	10	20
A/D	700	670	640	610	580	550	520	412

30	40	50	60	70	80	90	100	110
370	285	267	249	232	214	196	178	160

120	130	140	150	160	170	180	190	200
142	125	107	89	71	53	36	18	0

Water Temp calibration (AV piggy-back)

Temp	-50	-40	-30	-20	-10	0	10	20
A/D	560	549	537	526	515	504	492	481

30	40	50	60	70	80	90	100	110
320	308	226	190	131	106	63	53	30

120	130	140	150	160	170	180	190	200
8	7	6	5	4	3	2	1	0

The MAF sensor was not put on a flow bench to determine an exact calibration. Throttle position is a simple standard non-linear calibration.

ECU Parameters

Main Setup

Name	Abbreviation	Value
Injector Scaling	IJPU	13
Injector Current	IJCU	0
Injector Battery Comp	Ijbc	4
Efficiency Calc Method	EFF	1
Load Calc Method	LOAd	1
Load Sites Selection	Ld S	-1
Number of Cylinders	CYLS	4
Ref / Sync Mode	rEF	28
Crank Ref Teeth	cr T	36
Tooth Ratio	Tor	50
Crank Index Position	criP	575.0
Ignition Type	ign	1
Number of Coils	COIL	4
Ignition Dwell Time	dELL	2.0
Ignition Delay Time	dLY	50

Ref/Sync Sensor Setup

Name	Value
Ref Type	2
Ref Edge	0
Ref Filter	1.2
Ref Trigger Level	0.0
Sync Type	2
Sync Edge	0
Sync Filter	2.0
Sync Trigger Level	0.0

Auxiliary Output Settings

Auxiliary 1: Variable Inlet Cam Timing Control

Function	117
Source Channel	1
Proportional Gain	2.00
Integral Gain	0.5
Derivative Gain	0.08
Dead Band	0.3
Y Axis	1
Frequency	300
Polarity	0
Lo Limit	35
Hi Limit	55

Auxiliary 2: Variable Inlet Cam Lift Control

Function	105
Hi Load	100
Lo Load	50
Hi RPM	9000
Lo RPM	6175
Logic Polarity	0
Output Mode	0

Auxiliary 3: Variable Inlet Cam Timing Control

Function	2
Idle Speed	850
Proportional Gain	TBA
Integral Gain	TBA
Derivative Gain	TBA
Anti Stall Gain	TBA
Air Con Duty Inc	TBA
Integration Limit	TBA
Frequency	TBA
Minimum Duty Cycle	TBA
Maximum Duty Cycle	TBA

Auxiliary 4: Lambda Heater Control

Function	9
Lambda Sensor	1