Vehicle Installation Notes

Document Number		DVIN0010	
Title		Ford Escape 2.3L	
Approved By			
Revision	Date	Prepared By	Change History
Draft	28/10/2004	MM	

Ford Escape

This document is information gathered from the 2004 Ford Escape 2.3lt. No documentation was supplied with the vehicle so some points may need to be verified. The engine is a 2.3lt Duratec four cylinder automatic.

Chassis Number: JC0YU02Z341200004 KG 5 seat.

ECU Number: 1L8F-12B523-AD

Cylinders: 4

Cylinder Head: Twin cam, four valve with fixed cams.

Intake Manifold: Variable path operated via electric solenoid controlling vacuum source. There are two vacuum solenoids on the top of the intake manifold near cylinders 2 and 3, the one closest to cylinder 3 is for the manifold switch and is active at idle. The second solenoid is also active at idle but the function was not able to be traced.

Ref/Sync Setup: Simple 36-1 on the crank with a magnetic sensor and one sync tooth on inlet cam with magnetic sensor. Sync sensor located on top of inlet cam just behind cylinder four. Ref sensor located on front of engine under alternator. Ref trigger disc is externally mounted behind harmonic balancer. Both Ref an Sync were falling edge. Scope traces are available.

Other Sensors: The engine is fitted with an analogue AFM with inbuilt air temperature sensor. The throttle position is a common rotary pot. The engine temp sensor was calibrated into an M800 and calibration is provided below. The engine temp sensor part number is 978F-12A648-AA 7B02B.

Temp	-50	-40	-30	-20	-10	0	10	20	30
A/D	1092	1076	1060	1044	1028	1012	994	981	964

40	50	60	70	80	90	100	110	120	130
06	873	873	830	775	716	658	586	500	420

140	150	160	170	180	190	200
280	160	60	0	0	0	0

Other Devices: The idle control was via a two wire solenoid that operates using a varying duty cycle. The frequency of the valve was a constant 500Hz and a base duty cycle with a stable, hot idle was 65%. The throttle plate is set to a position where the engine will stall if the idle valve is disconnected. Another interesting thing about the throttle plate is that it is bent as standard although being a car directly from Ford this may be a non-production feature.

At the back of the head there is what looks like a stepper motor (six-wire) which looks like it is controlling oil flow but the external line could not easily be traced.

© Copyright – *MoTeC* Pty Ltd
Reproduction in whole or in part is prohibited without written approval from *MoTeC* Pty Ltd.

Injectors: Probably a Bosch item going by their part number (0280156151) and are 13.2ohms. The flow rates were:

Pressure (bar)	flow (cc/min)
2.5	180
3	195
3.5	212
4	230

These figures were calculated as 85% of the 100% duty flow.

CRIP: Crank index position was 90 degrees.

Coils: The engine is run in wasted spark with a dumb coil pack with no external modules that could be found. Coil resistance is 0.5 ohms.

Connectors: Below are the pin outs for some of the connectors.

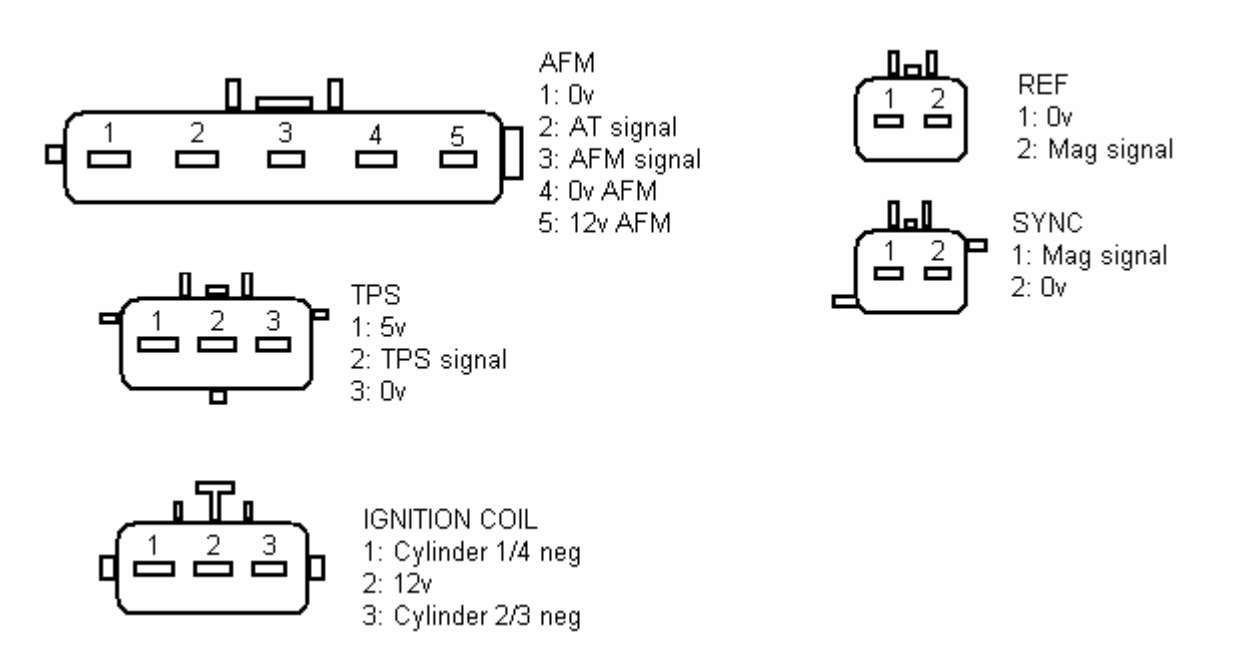

Scope traces: Scope traces for the Ref and Sync are provided on the following pages.

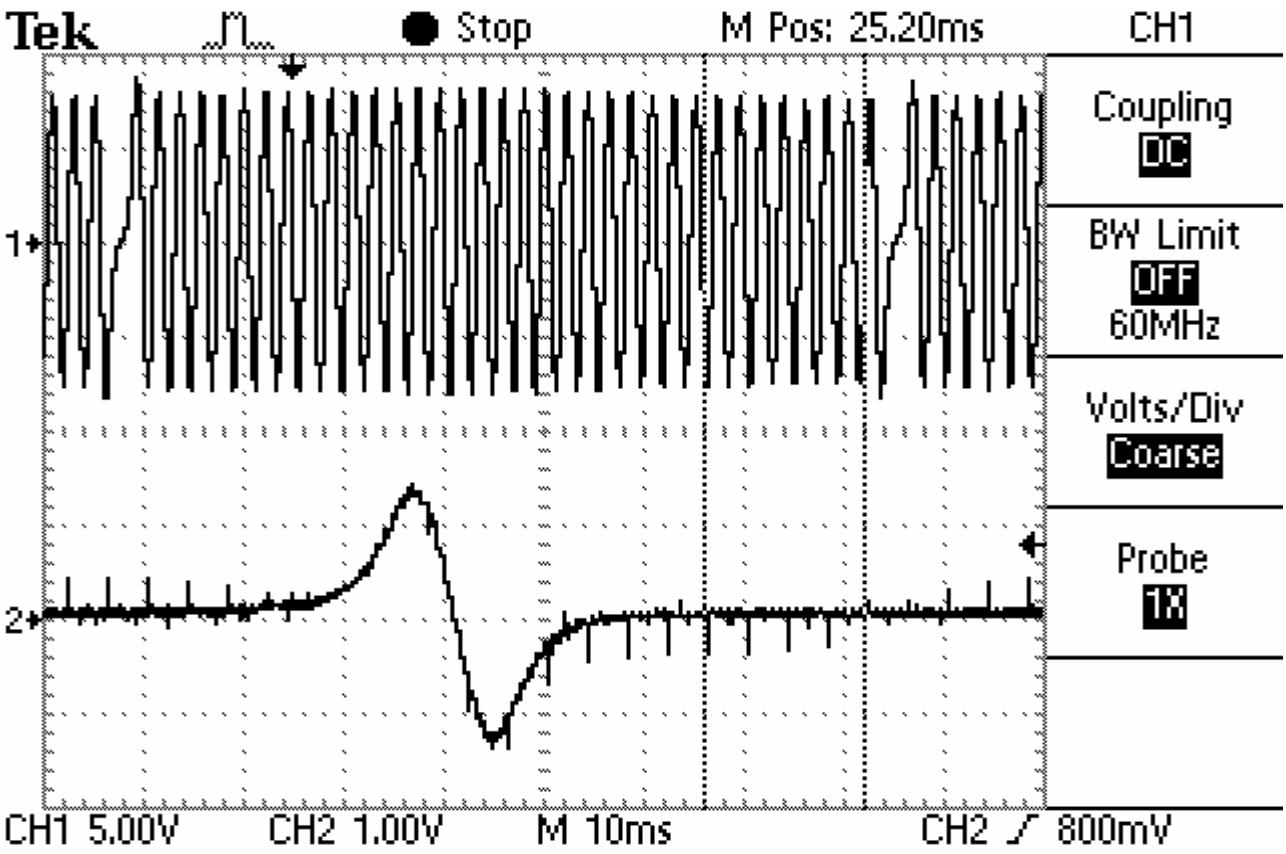
Tek
Stop
M Pos: 25.20ms
CH1
Coupling
DC
BW Limit
OFF
60MHz
Volts/Div
Coarse
Probe
1X
CH1 5.00V
CH2 1.00V
M 10ms
CH2 ∕ 800mV

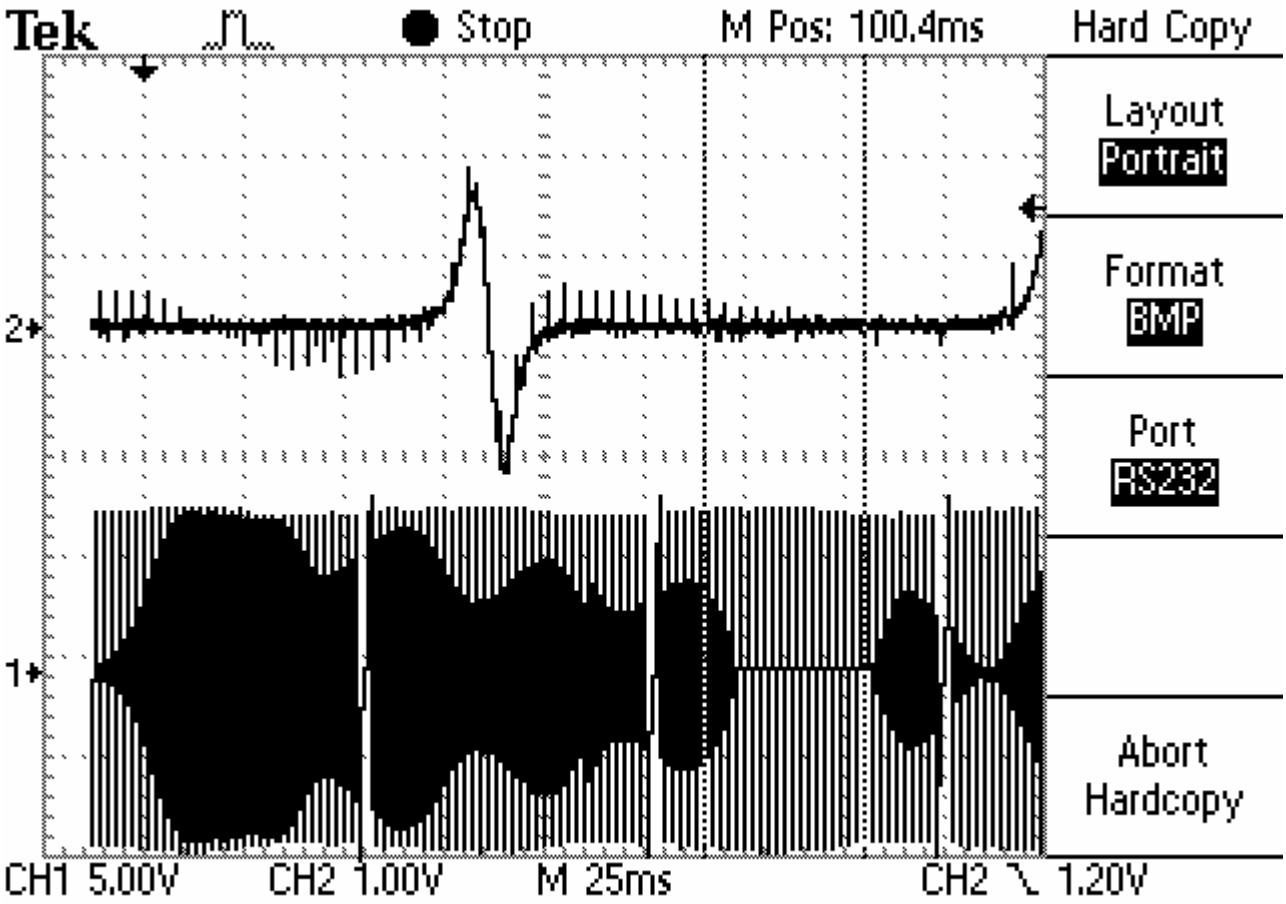
Tek
Stop
M Pos: 100.4ms
Hard Copy
Layout
Portrait
Format
BMP
Port
RS232
Abort
Hardcopy
CH1 5.00V
CH2 1.00V
M 25ms
CH2 ∖ 1.20V

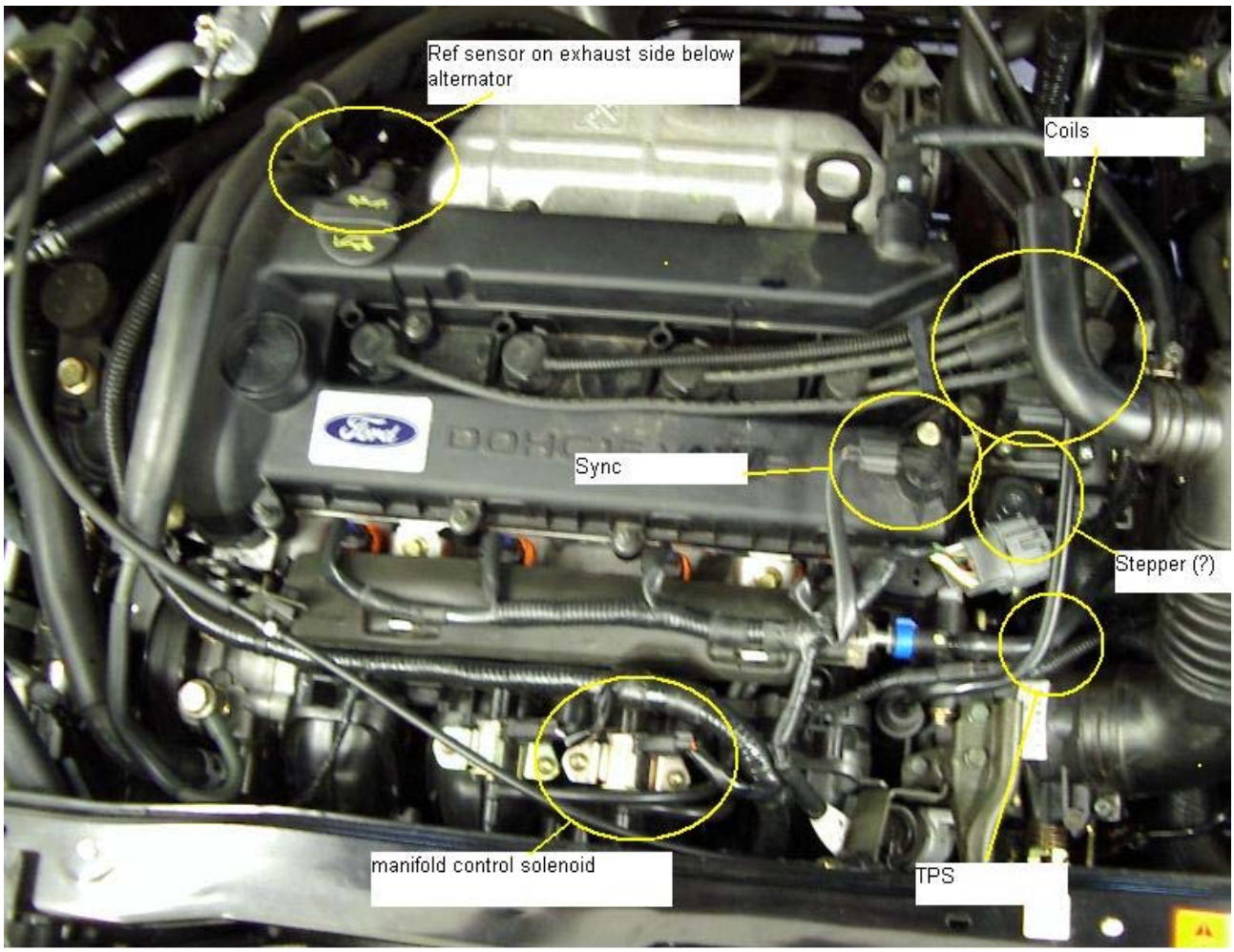
Ref sensor on exhaust side below alternator
Coils
Sync
Stepper (?)
manifold control solenoid
TPS