Document Number		DVIN0019	
Title		MoTeC MLS Installation Notes	
Approved By			
Revision	Date	Prepared By	Change History
1	12/05/2011	RB	

MoTeC MLS

Contents

Introduction

Parts Required

MLS Pinout for Chevrolet LS1 Engine

ECU Setup

MLS Pinout for Lexus/Toyota 1UZ Engine

ECU Setup

Introduction

The MoTeC MLS ECU is a derivative of the M4 ECU which has been designed to run a limited range of Chevrolet and Lexus/Toyota V8 engines. The ECU has a limited number of ref/sync modes to suit these engines which need to be wired to run injectors triggered in groups of 2 (Semi-Sequential Group Fire). The MLS has its own version of EMP software which is available from the MoTeC web site.

The Chevrolet LS series V8 engine has 8 coils which are configured to run in wasted spark mode. Using an MLS this leaves 1 auxiliary output spare to use as required (fuel pump, fans etc.).

The MLS can also be configured to run the Lexus/Toyota 1UZFE engine with twin distributors. Ignition outputs are limited to 2 with the remaining 3 Auxiliary outputs available to be used as required.

In all other respects the MoTeC MLS functions in the same way as the MoTeC M4.

Parts Required

MoTeC Part No.	Description
10005	MLS ECU
26011	MLS Enable

Optional MoTeC Part No.	Description
26014	MLS Advanced Functions & Logging 512kB
26015	MLS Logging 512kB
26016	MLS Wideband Lambda

© Copyright – *MoTeC* Pty Ltd
Reproduction in whole or in part is prohibited without written approval from *MoTeC* Pty Ltd.

Chevrolet LS1 MLS Pinout

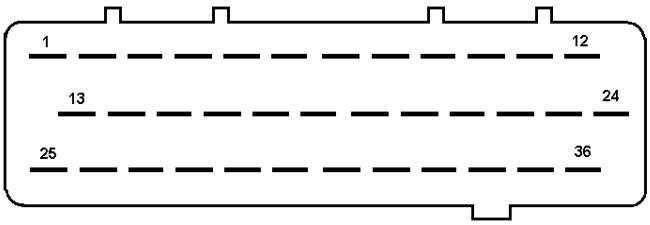

Looking into ECU connector

MLS Pin	MLS Pin No.	LS1 Function
12V	1	12v Switched (ECU Relay)
GND	25	ECU Earth
8V ENG	26	8V supply to Ref sensor
5V ENG	4	5V sensor supply
0V ENG	27	OV sensor supply
INJ1	2	Injector Cylinder 1&7
INJ2	3	Injector Cylinder 2&8
INJ3	14	Injector Cylinder 4&6
INJ4	15	Injector Cylinder 3&5
IGN1	33	Ignition Cylinder 1&6
AUX1	13	Fuel Pump or spare output
AUX2	34	Ignition Cylinder 8&5
AUX3	35	Ignition Cylinder 7&4
AUX4	36	Ignition Cylinder 2&3
REF Hall	5	Ref Sensor (Hall)
REF Mag	6	Not used
SYNC Hall	7	Sync Sensor (Hall)
SYNC Mag	8	Not used
TP	16	Throttle Position
MAP	17	Manifold Pressure
AUX V	18	Spare
ET	28	Engine Temp
AT	29	Air Temp
AUX T	30	Spare
DIG1	19	Spare
DIG2	20	Spare
LA+	31	Lambda+
LA-	32	Lambda-
RS232 TX	22	Comms
RS232 RX	23	Comms

Chevrolet LS1

Setup

Parameter	Value	Notes
Injector Current	0	
Injector Battery Comp	4	
Injector Operation	2	
Eff Calc Method	1	
Load Calc Method	1	
Number of Cylinders	48	
Ref/Sync Mode (REF)	233 or 81/83	For engines with 24 crank teeth use Mode 233 . For Engines with 60-2 crank teeth use mode 81/83
Ref Sensor Type	1	
Sync Sensor Type	1	
Crank Ref Teeth (CRT)	24 (Mode 233) 60 (Mode 81/83)	
Tooth Ratio	45	
Crank Index Position(CRIP)	455 (Mode 233) Unknown (Mode 81/83)	
Ignition Type (IGN)	1	
Number of Coils (COIL)	4	
Ignition Dwell Time (DELL)	2	
Ignition Delay Time	40	
Firing Order	1,8,7,2,6,5,4,3	

Ref/Sync Wiring

The Crank Sensor is used for both Ref and Sync. The Cam Position Sensor is not required. Refer to the drawing below for wiring detail.

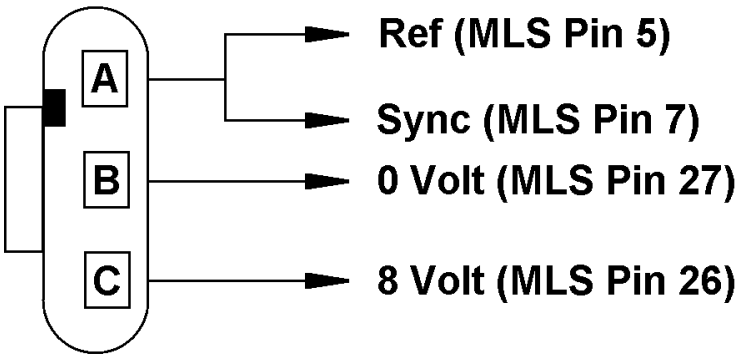

Chevrolet LS Crank Sensor

View looking at the sensor

MAP Sensor Wiring

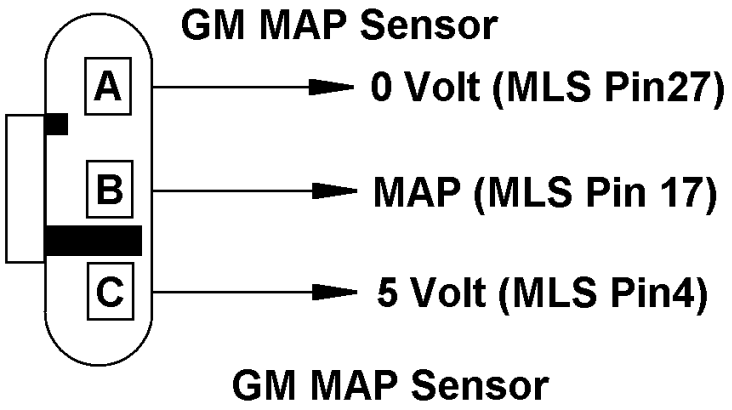

View looking at the sensor

Lexus / Toyota 1UZ MLS Pinout

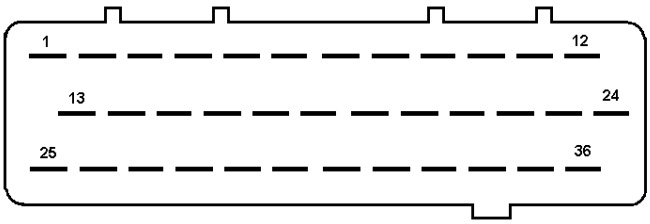

Looking into ECU connector

MLS Pin	MLS Pin No.	1UZ Function
12V	1	12v Switched (ECU Relay)
GND	25	ECU Earth
8V ENG	26	Not used
5V ENG	4	5V sensor supply
0V ENG	27	OV sensor supply
INJ1	2	Injector Cylinder 1&8
INJ2	3	Injector Cylinder 4&3
INJ3	14	Injector Cylinder 6&5
INJ4	15	Injector Cylinder 7&2
IGN1	33	Ignition Cyl 1,4,6,7
AUX1	13	Idle Control
AUX2	34	Ignition Cyl 2,3,5,8
AUX3	35	Spare
AUX4	36	Fuel Pump
REF Hall	5	Not used
REF Mag	6	Ref Sensor (Mag)
SYNC Hall	7	Not used
SYNC Mag	8	Sync Sensor (Mag)
TP	16	Throttle Position
MAP	17	Manifold Pressure
AUX V	18	Spare
ET	28	Engine Temp
AT	29	Air Temp
AUX T	30	Spare
DIG1	19	Spare
DIG2	20	Spare
LA+	31	Lambda+
LA-	32	Lambda-
RS232 TX	22	Comms
RS232 RX	23	Comms

Lexus/Toyota 1UZ

Setup

Parameter	Value	Notes
Injector Current	0	
Injector Battery Comp	4	
Injector Operation	2	
Eff Calc Method	1	
Load Calc Method	1	
Number of Cylinders	48	
Ref/Sync Mode (REF)	14	
Ref Sensor Type	2	
Sync Sensor Type	2	
Crank Ref Teeth (CRT)	12	
Tooth Ratio	40	
Crank Index Position(CRIP)	5	
Ignition Type (IGN)	1	
Number of Coils (COIL)	2	
Ignition Dwell Time (DELL)	3.0	
Ignition Delay Time	40	
Firing Order	1,8,4,3,6,5,7,2	

Ref/Sync Wiring

There are 2 Cam Position Sensors fitted to the 1UZ engine. The one on the left hand bank is used as the Sync sensor. Refer to the drawing below for wiring detail.

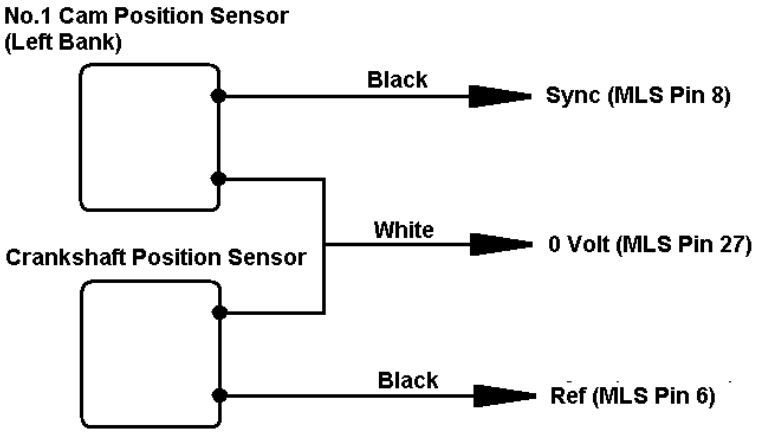

1UZ Ref/Sync Sensor Connection

1UZ Ignition Wiring

Refer to MoTeC Drawing number M28

No1 Igniter (5 connections).	FAIL / IGF1:	Do not connect
	TRIG / IGT1:	IGN1 (Pin33)
	COIL / C1-:	Coil 1 –ve (White)
	BAT / B+:	12V ignition switched
	TACH	Tacho (needs to be 4 cylinder tacho)
No2 Igniter (4 connections).	FAIL / IGF2:	Do not connect
	TRIG / IGT2:	AUX2 (Pin34)
	COIL / C2-:	Coil 2 –ve (White)
	BAT / B2:	12V ignition switched

Throttle Position Sensor / Switch

The 1UZ Throttle Position Sensor incorporates both a throttle potentiometer and an idle position switch. The idle switch is not required for MoTeC MLS operation. Connection is detailed below.

VC: 5V (Pin4)
E2: 0V (Pin27)
VTA: TP (Pin16)
IDL: Not used (idle switch)