IMPORTANT: This diagram is for MoTeC #41005 ONLY
Use M40 sheet 3 for MoTeC # 41010. Using the incorrect wiring diagram may cause damage to CDI or wiring.

CAUTION!
HIGH VOLTAGE

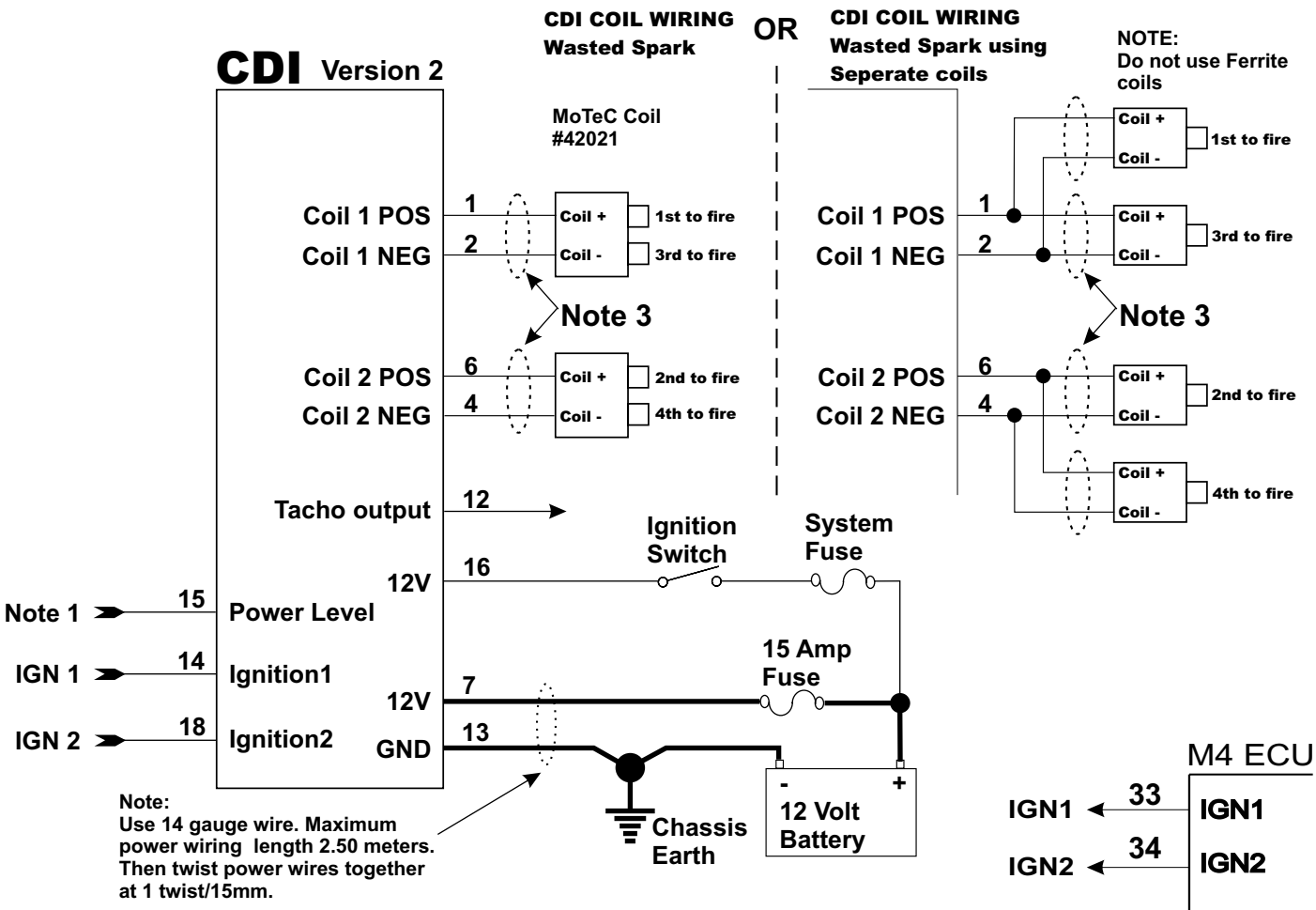

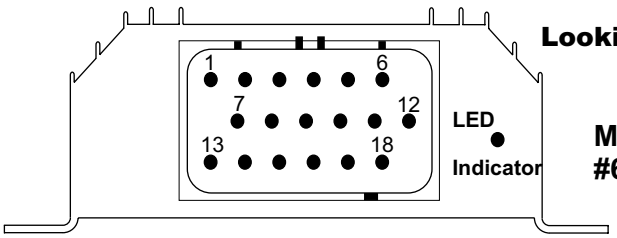

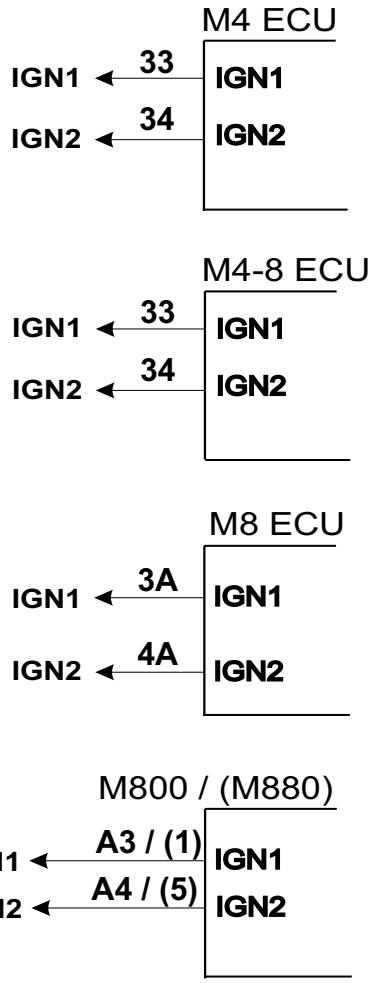

NOTE 1: Power Level Input Setting		
Connection	Power Output	Max Input Frequency
Open	105mJ	600Hz
Grounded	170mJ	350Hz

NOTE 2: Specifications & ECU setup			
ECU Setup	Ignition Type: 1	Coil: 2	Dwell: 0
Maximum Supply Current:	7.5A		
Tacho output:	12V, 25mA square wave		
Maximum operating Temperature:	85 Deg C.		
Ignition Inputs cannot be fired at the same time			

Note 3:
Use 18 Gauge wire. Twist wires from CDI to coils at 1 twist/15mm. Maximum wire length 2.0 meters. Keep coil wires away from input wires to ECU and allother wires.

Note4:
The LED indicator will illuminate when power is first applied and then flash with each trigger pulse.

MoTeC	Title DUAL CHANNEL CDI				Sheet No	Drawing No
	Date 30/03/2006	Drawn ST	App KT	Products ECU	2 of 3	M40