IMPORTANT: This diagram is for MoTeC #41011 ONLY
Use M44 sheet 1 for MoTeC # 41003. Using the incorrect wiring diagram may cause damage to CDI or wiring.

PART 41011 IS NOT A DIRECT REPLACEMENT FOR 41003

CAUTION! HIGH VOLTAGE

Note 3:
Use 18 Gauge wire. Place Coil negative junctions < 100mm of the CDI. Twist wires from CDI to coils at 1 twist/20mm. Maximum wire length 2.0 meters. Keep coil wires away from input wires to ECU and all other wires.

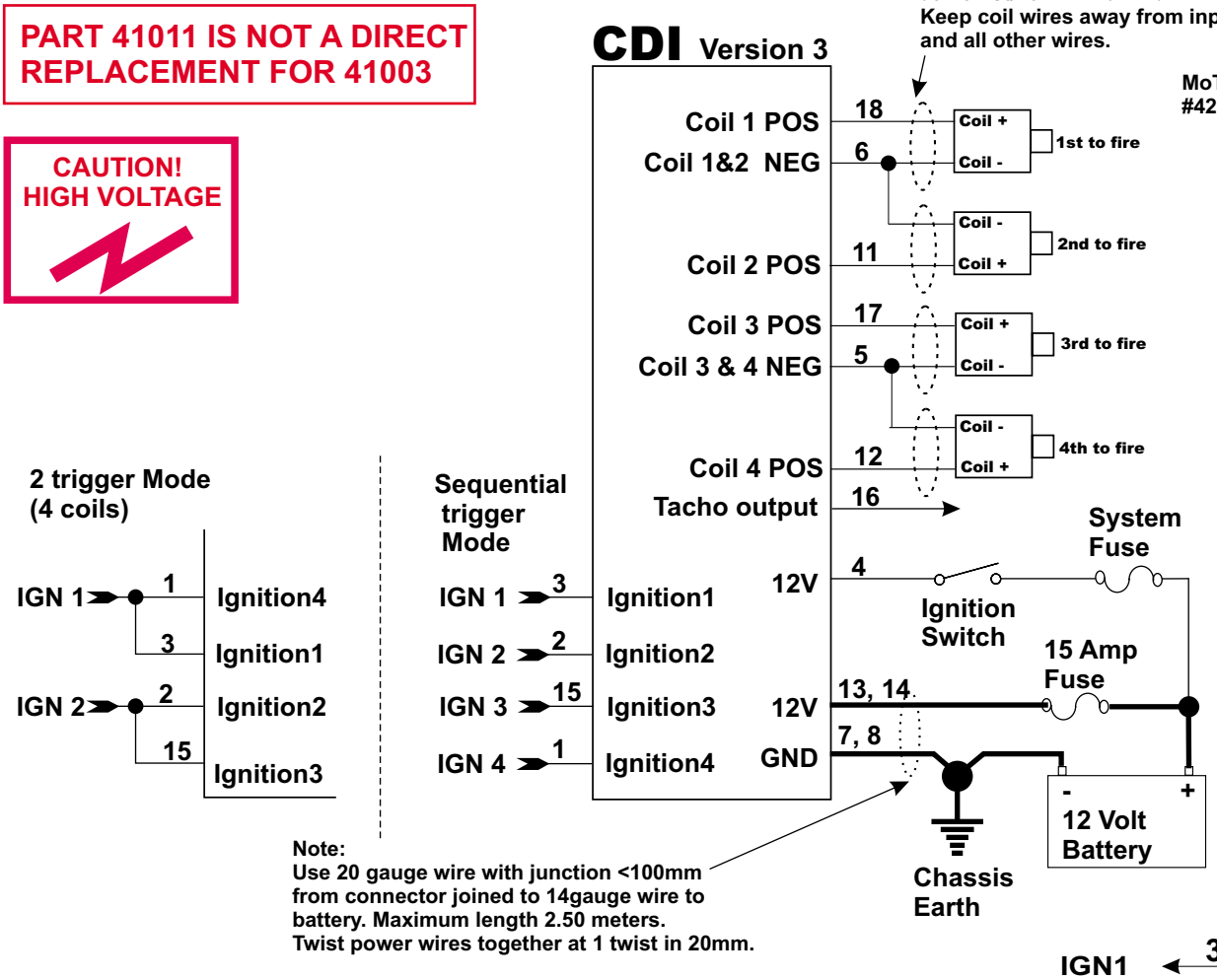

Note:
Use 20 gauge wire with junction <100mm from connector joined to 14gauge wire to battery. Maximum length 2.50 meters.
Twist power wires together at 1 twist in 20mm.

Note: All coil & power wires must be shielded to comply with Australian EMC standards.

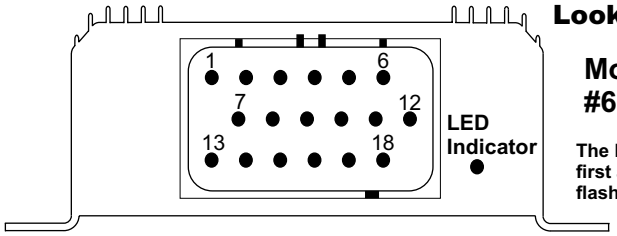

Looking into Connector on CDI

MoTeC Connector Kit #65018

The LED indicator will illuminate when power is first applied and then extinguish. The led will flash briefly for each consecutive trigger input.

M4 ECU

IGN1	33	IGN1
IGN2	34	IGN2
IGN3	35	IGN3
IGN4	36	IGN4

M8- ECU

IGN1	3A	IGN1
IGN2	4A	IGN2
IGN3	15A	IGN3
IGN4	16A	IGN4

M800 / (M880)

IGN1	A3 / (1)	IGN1
IGN2	A4 / (5)	IGN2
IGN3	A5 / (4)	IGN3
IGN4	A6 / (10)	IGN4

Specifications:
Tacho output: 12V, 25mA square wave
Maximum Power supply: 16 Volt
Maximum Supply Current: 6.0A
Maximum operating Temperature: 85 Deg C.
Maximum Ignition rate 1,000Hz

Power Output	Input Frequency
105mJ	650Hz
150mJ	450Hz

ECU SETUP

ign	1
COIL	2 or 4
dELL	0

MoTeC	Title	Four CHANNEL CDI				Sheet No	Drawing No
	Date 30/03/2006	Drawn ST	App RR	Products ECU		2 of 2	M44