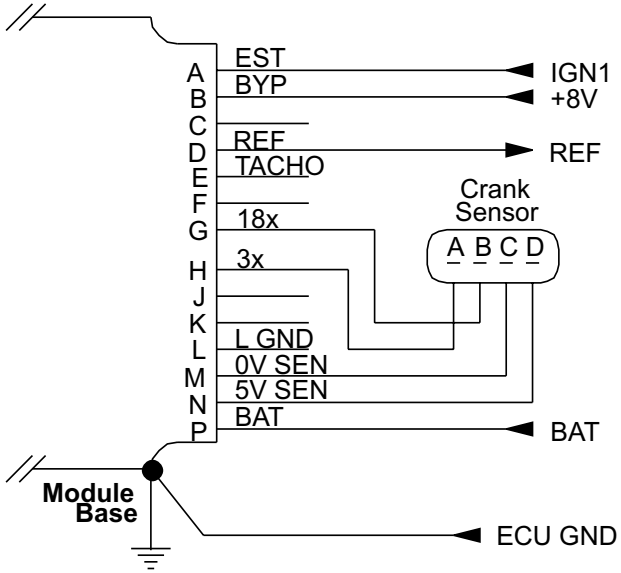

Earth Module base to Chassis or Engine Block

NOTE If earthed to the chassis there must be a heavy cable between the chassis and the engine block.

NOTE If the modules are attached to the engine block they must be mounted on a bracket in a well ventilated area.

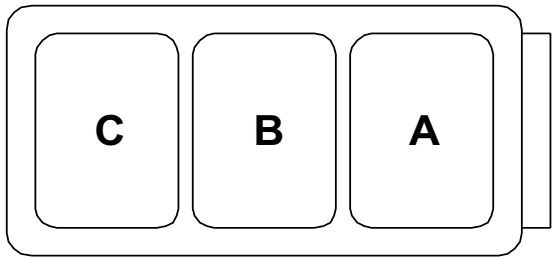

Coil Firing Sequence

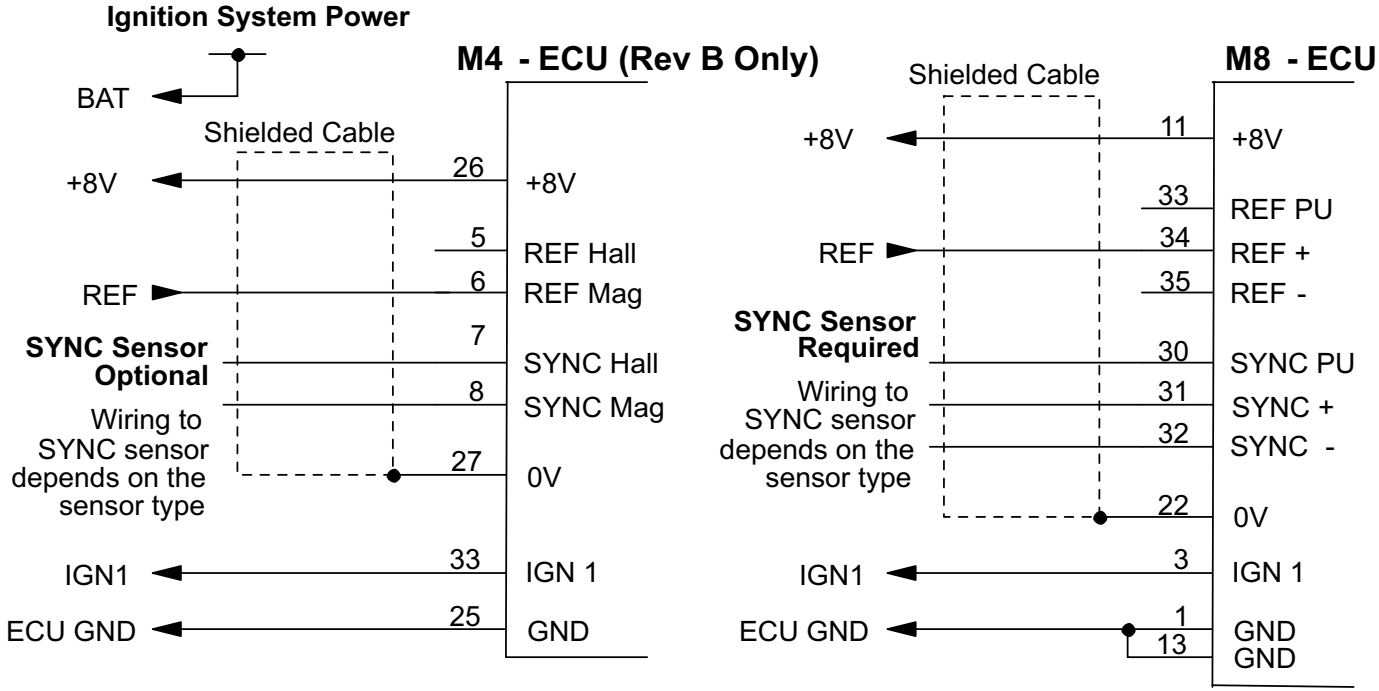

Software Version	M4 : V3.0 or higher	M8 : V3.1 or higher

Note: It is not advised to use "Ignition cut" as the RPM limiter type with this module .

Setup	M4 Only	rfSn	3
		SYSn	*
		rEF	3 or 4 *
		cr t	0
		criP	65
		ign	1
		COIL	1
		dELL	6.0

* Depends on SYNC sensor type (If Used)

MoTeC

Title	GM 6CYL DFI (Dual edge)				Sheet No	Drawing No
Date 03/11/2006	Drawn ST	App	Products ECU		1 of 2	S15

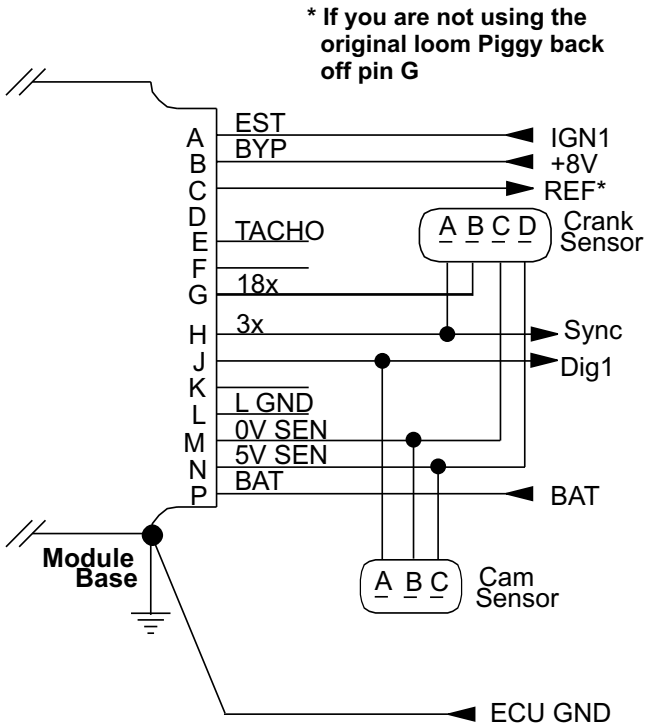

Earth Module base to Chassis or Engine Block

NOTE If earthed to the chassis there must be a heavy cable between the chassis and the engine block.

NOTE If the modules are attached to the engine block they must be mounted on a bracket in a well ventilated area.

For M800 two modes are supported.

Setup for both modes
Crip = 72
Ref Edge = Rise
Sync Edge = fall
Crank Teeth = 18

For Group fire operation:
Cam sensor is not required.
Ref/Sync Mode = 48
Number of Cylinders = 36

For Sequential operation
Cam sensor signal is required to be connected to Digital 1 input.
Ref/Sync mode = 49
Number of Cylinders = 6
Digital1 setup:
Function = 19 (cam position)
Edge = Rise
Offset = 430
Channel = 1
Teeth = 1

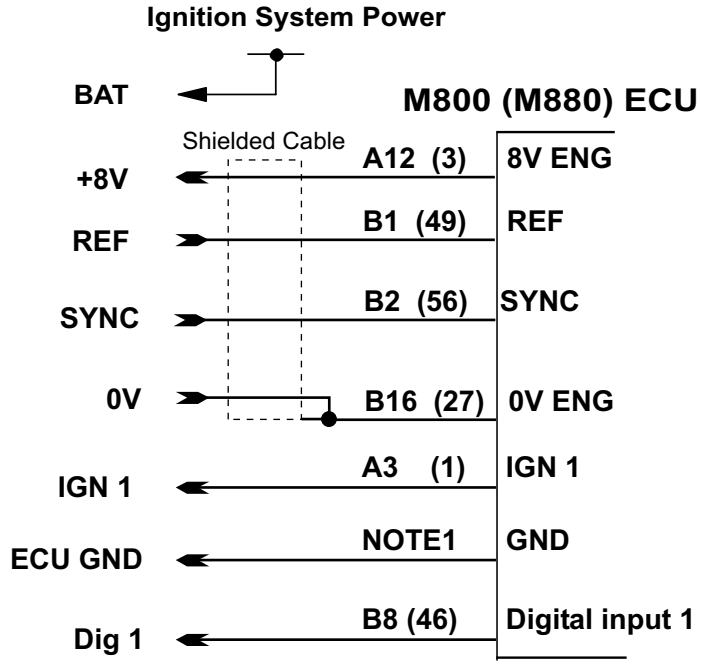

Note1:
M800 Ground pins are A10 and A11
M880 Groung pins are 14, 15, 19, 20, 21, 22

Dwell Setup:
The Dwell setup is important for this module. It is possible for the module to ignore the ignition signal if the dwell time is too small. The module will also drop into limp home mode if the Ignition signal is missing therefore it is not advised to use Ignition cut for RPM limiting.

Dwell Table version 2.3 / 3.3 or greater software								
RPM	800	1000	2000	3000	4000	5000	6000	10000
Dwell (ms)	11	5.8	4.8	4.4	3.5	3.2	2.9	2.5

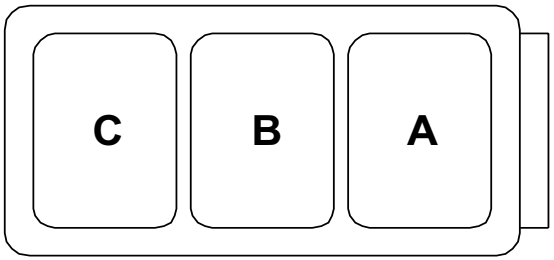

Coil Firing Sequence

MoTeC	Title GM 6CYL DFI (Dual edge)				Sheet No	Drawing No
	Date 03/11/2006	Drawn ST	App	Products ECU	2 of 2	S15