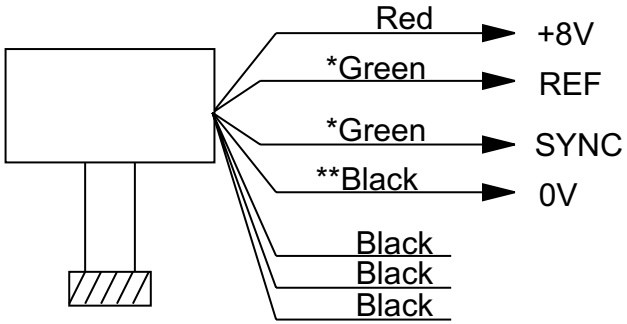

* Either Green Wire may be used
** Any of the black wires may be used

Pinout Type A

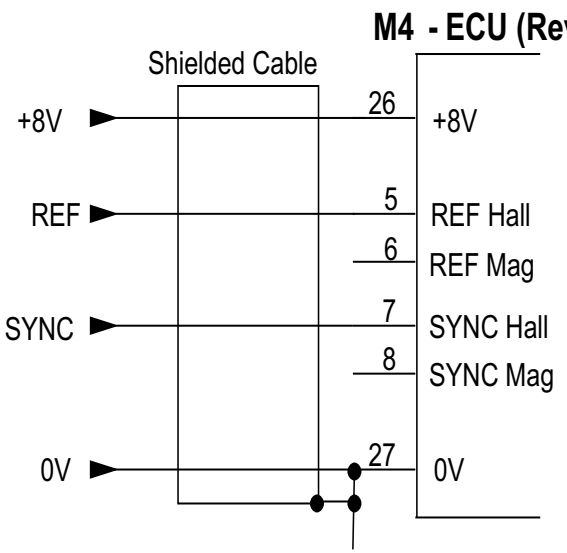

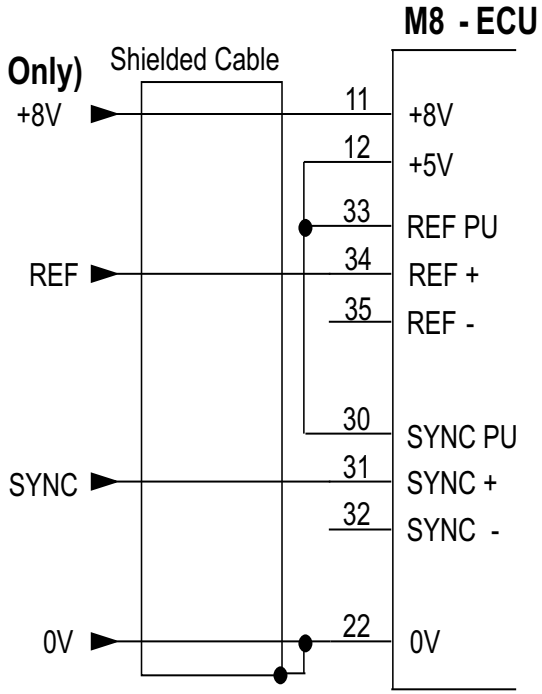

Software Version	M4 : V3.5 or higher (V3.8 for Multi Tooth)	M8 : V3.9 or higher

Engine Type			FORD V8				
Pinout Type			A				
Setup	M4 Only	rfSn	1				
		SYSn	1				
		rEF	182				
		cr t	0				
		criP	545 *				

*** For Crank advance of 5 Deg BTDC**

MoTeC	Title Ford Narrow Tooth				Sheet No	Drawing No
	Date 17/01/2008	Drawn ST	App AD	Products ECU	1 of 2	T18

M800 (M880) ECU

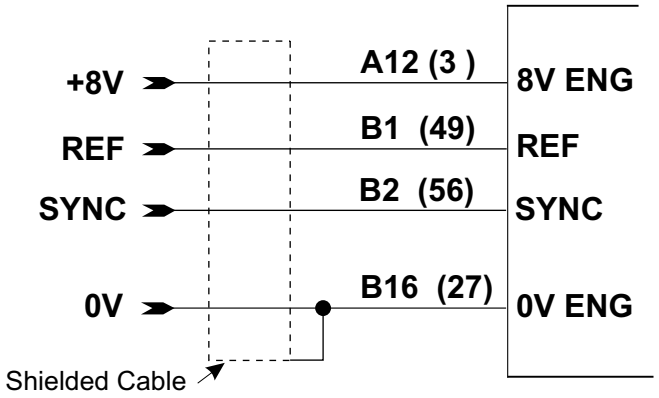

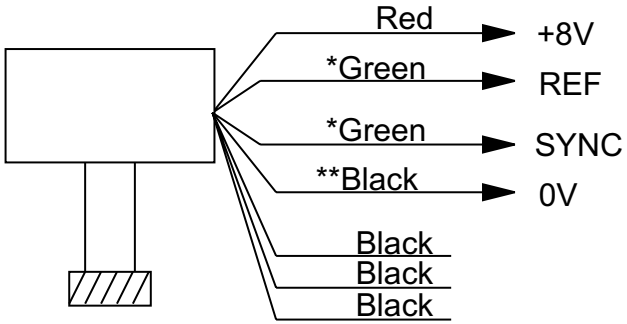

* Either Green Wire may be used
** Any of the black wires may be used

Pinout Type A

Engine Type	V8				
Pinout Type	A				

Sensor Setup - REF/SYNC Sensor Setup					
Software Version	**2.X**	**3.X**			
REF Sensor Type	Hall	1			
REF Sensor Edge	Rise	1			
REF Sensor Filter	1.0	1.0			
SYNC Sensor Type	Hall	1			
SYNC Sensor Edge	Fall	0			
SYNC Sensor Filter	1.0	1.0			

General Setup - Main Setup					
REF / SYNC Mode	18	18			
Crank Ref Teeth	0	4			
Crank Index Position	545*	545*			

*** For Crank advance of 5 Deg BTDC**

MoTeC	Title Ford Narrow Tooth				Sheet No	Drawing No
	Date 17/01/2008	Drawn ST	App AD	Products ECU	2 of 2	T18