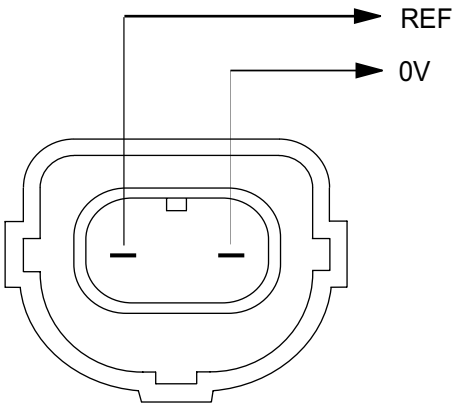

Looking into connector on loom

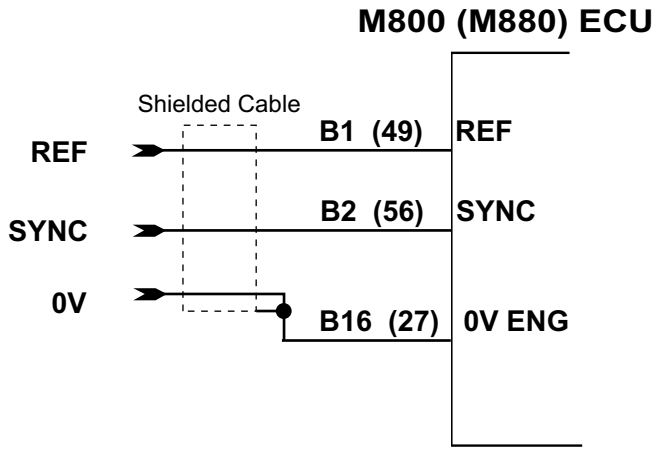

General Setup Main Setup	Sequential With Sync Sensor	Group Fired No Sync Sensor
REF / SYNC Mode	25	24
Crank Ref Teeth	36	36
Crank Index Position	20	20
Cyls	4	24 or -2

Sensor Setup REF/SYNC Sensor Setup	
REF Sensor Type	Magnetic
REF Sensor Edge	Fall
REF Sensor Filter	1.0
SYNC Sensor Type	Depends on sensor used
SYNC Sensor Edge	Fall/Rise
SYNC Sensor Filter	Depends on tooth width

SYNC Position

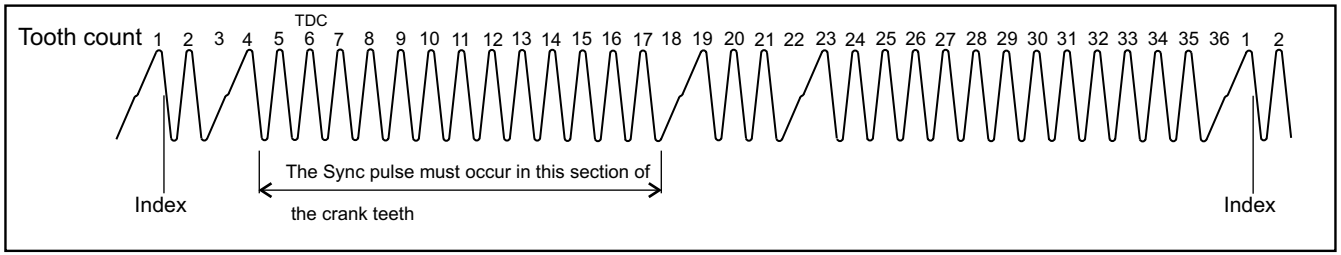

Magnetic Sensor Tables Sensor Setup - Ref / Sync Setup					
REF / SYNC RPM Site	0	500	1000	7000	RPM
Ref Magnetic Levels	0.2	1.0	2.0	2.0	Volts

Note: Magnetic Sensor levels may need to be adjusted in some applications. SYNC sensor Magnetic levels will need to be set up if a magnetic sensor is used for the SYNC input.

MoTeC	Title Rover K series				Sheet No	Drawing No
	Date 24/11/2006	Drawn ST	App	Products ECU	1 of 1	T23