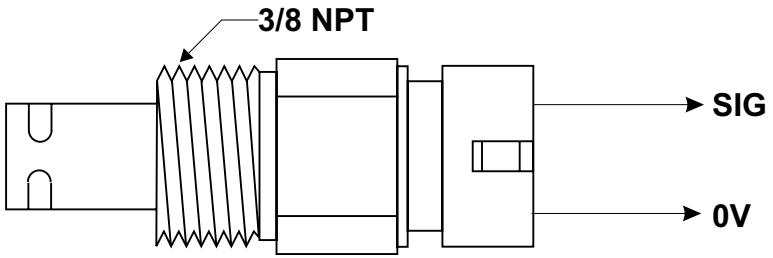

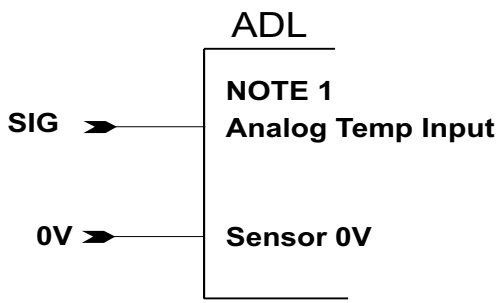

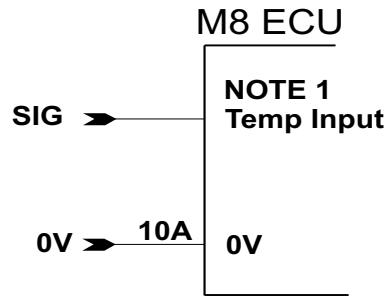

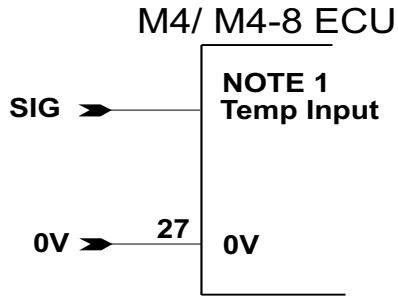

ADL Setup

Channel Assignments

Assign a Temprature Channel to the appropriate pin

Sensor Calibration

Press "Select" and choose
Delco Manifold Air Temp.C1T

ECU Setup M8

Sensor Calibration	Deg C	Deg F
MoTeC Number 54001	2	5

ECU Setup M4

Sensor Calibration	Deg C
MoTeC Number 54001	2

NOTE 1

ADL PINS

0V Analog Pins are 17, 27, 33, 40, 43
Analog TEMP Input Pins are 34, 35, 36, 37, 38, 39, 41, 42.

M8 Pins

0V Pins are 10A, 2B, 3B
TEMP Input Pins are 26A, 25A, 7B, 8B, 9B, 14B, 15B

M4 M4-8

TEMP Input Pins are 28, 29,30

MoTeC	Title DELCO AIR TEMP SENSORS				Sheet No	Drawing No
	Date 30/03/2005	Drawn ST	App	Products ADL, ECU	1 of 2	X19