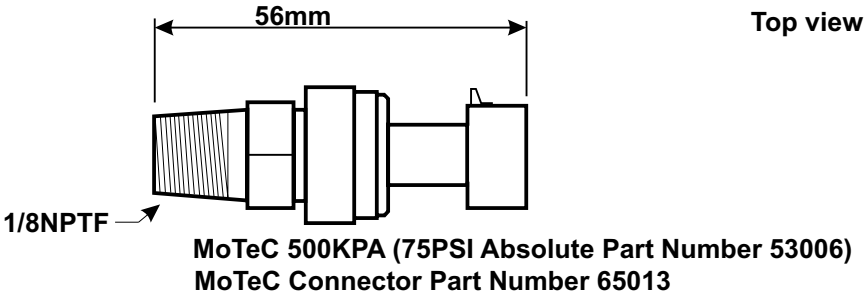

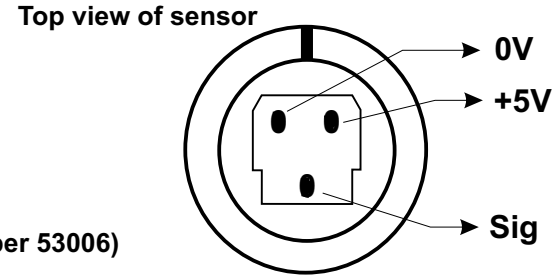

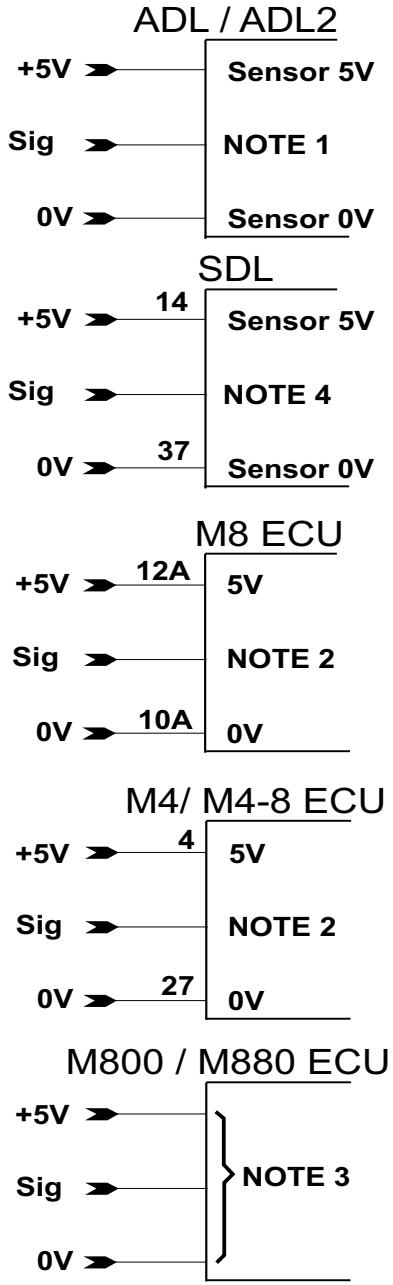

ADL / ADL2 / SDL Setup

Channel Assignments
Assign the pressure Channel to the appropriate pin

Sensor Calibration
Press "Select" and choose a calibration file that suits your needs. For example:
TI 0-75 PSIA.C1P = PSI absolute calibration

M800 / M880 / M8 Setup

Note: M800 Version 3.3 + software Use the ADL calibration method

Parameter / Display	as KPA	as PSI	as InHg
Sensor Calibration	-16	-22	-28
0 Pressure AD Value	103		
Max Pressure AD Value	895		
Use interpolate function to complete table values			

M4 / M4-8 Setup

(DISPLAY IN KPA)

Parameter / PIN	MAP	Aux Volt **
Sensor Calibration	-1	-5
0 Pressure AD Value	103	260
*Pressure / AD Value	500 / 895	400 / 895
Use interpolate function to complete table values		

*** AD values at higher pressures must increase by a value of 4. See the ECU help files for further information.**

**** Will not display vacuum readings**

NOTE 1:
+ 5V Pins are 18, 28, 44
0V Pins are 17, 27, 33, 40, 43
Analog Volt Input Pins are 1, 2, 3, 4, 5, 19, 20, 21, 22, 23, 24, 25, 26, 45, 46, 47, 48, 49, 50

NOTE 2:
M8 input pins are 28A, 27A, 13B & 16B
M4 and M4-8 input pins are 17 & 18

NOTE 3:	M800	M880
+5V ENG Pin	A2	16
+5V AUX Pin	A9	34
0V ENG Pin	B16	27
0V AUX Pin	B15	11
Analog Volt Input Pins	A15, A16, A17, A25 B20, B21, B22	18, 6, 7, 12 36, 35, 44

NOTE 4:
SDL AV input pins are 1,2,15,16,17,18,19,20

MoTeC	Title TI PRESSURE SENSORS				Sheet No	Drawing No
	Date 05/12/2006	Drawn ST	App	Products ADL, ECU	1 of 5	X30