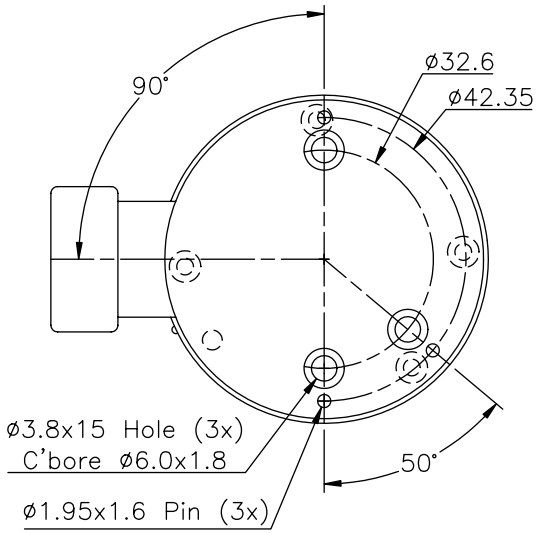

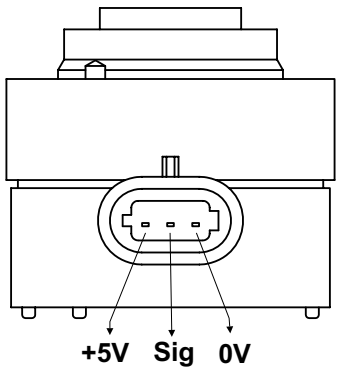

MoTeC Position Sensor Part Number 57170
MoteC Connector Part Number 64014

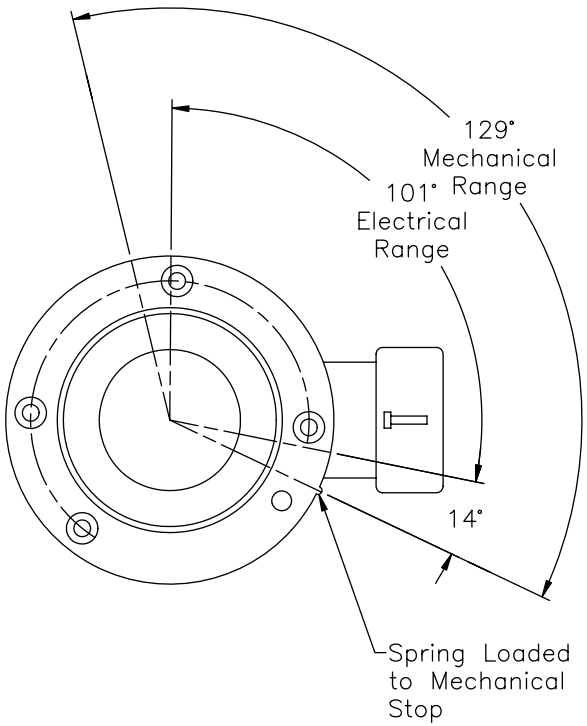

NOTE 1:
+ 5V Pins are 18, 28, 44
0V Pins are 17, 27, 33, 40, 43
Analog Volt Input Pins are 1, 2, 3, 4, 5, 19, 20, 21, 22, 23, 24, 25, 26, 45, 46, 47, 48, 49, 50

NOTE 2:
M8 input pins are 28A, 27A, 13B & 16B
M4 and M4-8 input pins are 17 & 18

NOTE 3:	M800	M880
+5V ENG Pin	A2	16
+5V AUX Pin	A9	34
0V ENG Pin	B16	27
0V AUX Pin	B15	11
Analog Volt Input Pins	A15, A16, A17, A25 B20, B21, B22	18, 6, 7, 12 36, 35, 44

NOTE 4:
SDL AV input pins are 1,2,15,16,17,18,19,20

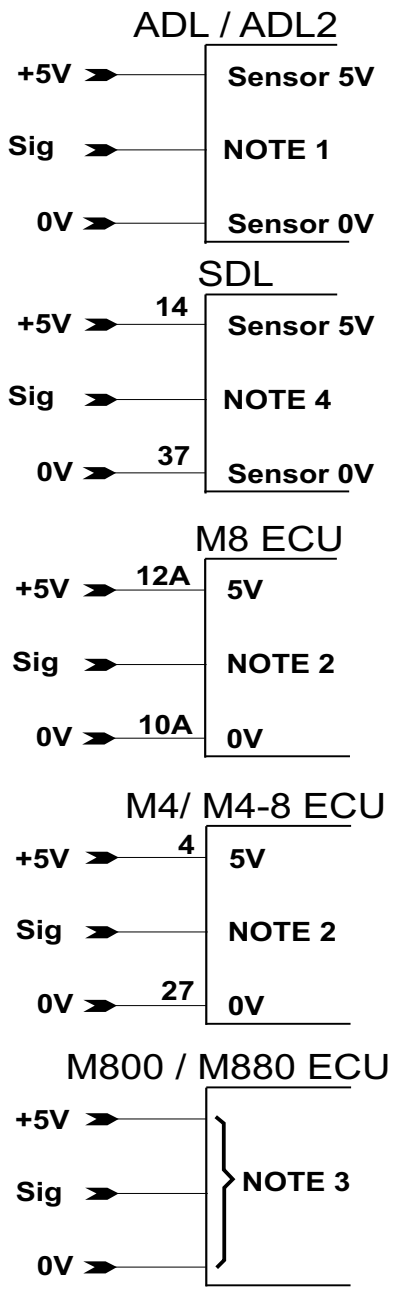

MoTeC	Title	Rotary Position Sensor (contactless)			Sheet No	Drawing No
	Date 20/02/2008	Drawn DR	App	Products ADL, ECU	1 of 1	X33