Hall Sensor

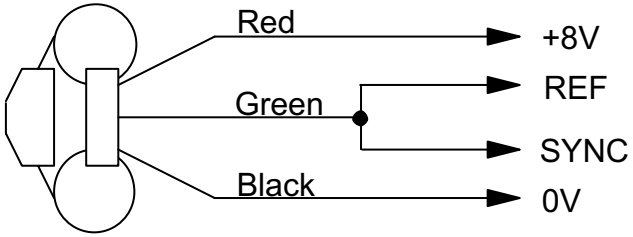

HKZ101

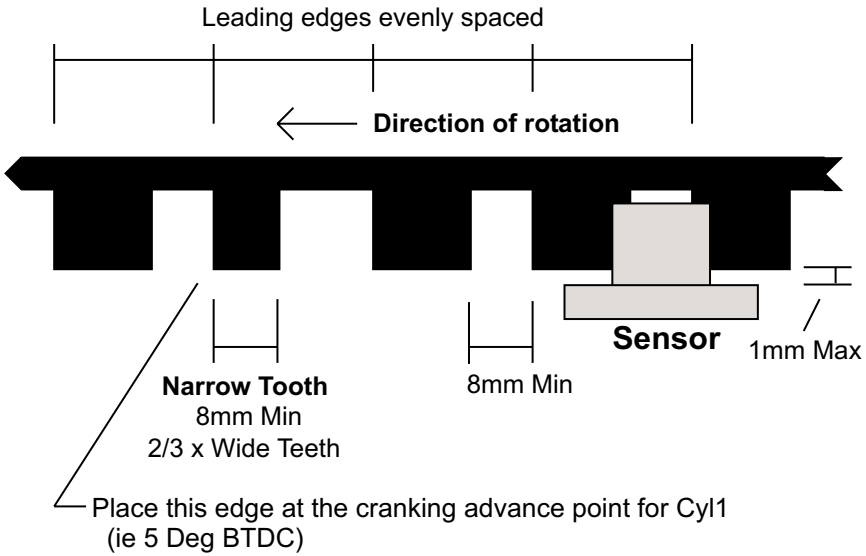

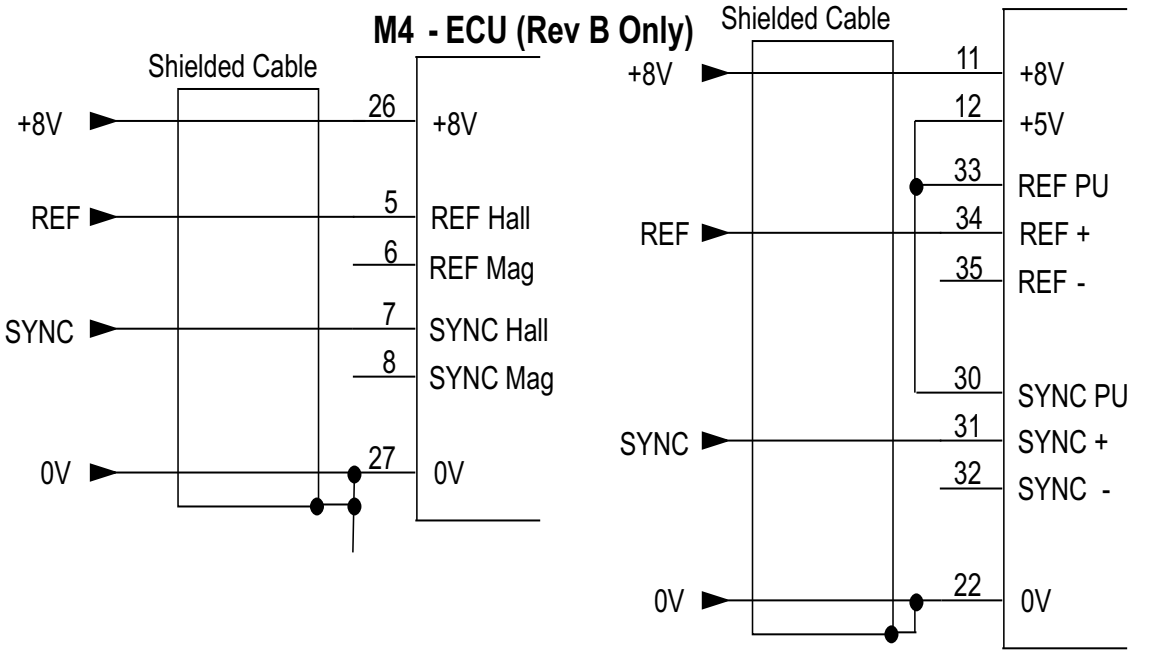

Software Version	M4 : V3.5 or higher (V3.8 for Multi Tooth)	M8 : V3.9 or higher

Engine Type			6 Cyl	8 Cyl			
Setup	M4 Only	rfSn	1	1			
		SYSn	1	1			
		rEF	182 #	182 #			
		cr t	0	0			
		criP	485 *	545 *			

181 or 182 may be used on an M4 ECU
* For cranking advance of 5 deg BTDC

Notes

The leading edges on all teeth must be evenly spaced
The width of the Narrow Tooth must be exactly 2/3 x wide teeth
(ie. Wide Teeth are 1.5 x Narrow Tooth)
The minium Narrow Tooth is 8mm
The minium Tooth gap is 8mm
The number of teeth equals the number of cylinders
The leading edge of the Narrow Tooth must be placed at
the cranking advance point for Cylinder No 1

MoTeC	Title Narrow Tooth - General				Sheet No	Drawing No
	Date 24/09/2008	Drawn ST	App AD	Products ECU	1 of 2	T04

Hall Sensor

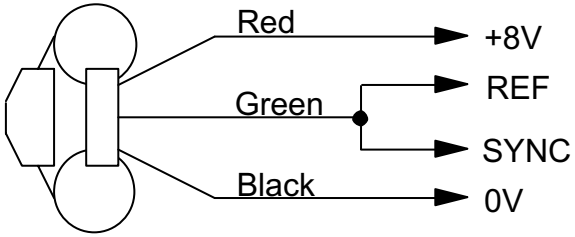

HKZ101

Sensor Setup - REF/SYNC Sensor Setup	
REF Sensor Type	Hall
REF Sensor Edge	Fall or Rise
REF Sensor Filter	1.0
SYNC Sensor Type	Hall
SYNC Sensor Edge	Opposite of REF sensor edge
SYNC Sensor Filter	1.0

General Setup - Main Setup				
Number of Cylinders	6		8	
REF / SYNC Mode	18		18	
Crank Index Position	485*		545*	
Software Version	2.x	3.x	2.x	3.x
Crank ref Teeth	0	3	0	4

*** For Crank advance of 5 Deg BTDC**

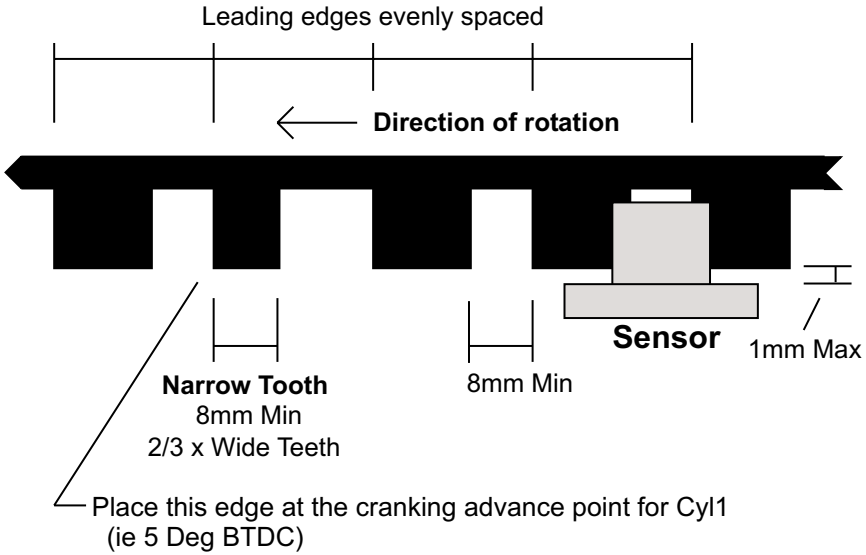

M800 (M880) ECU

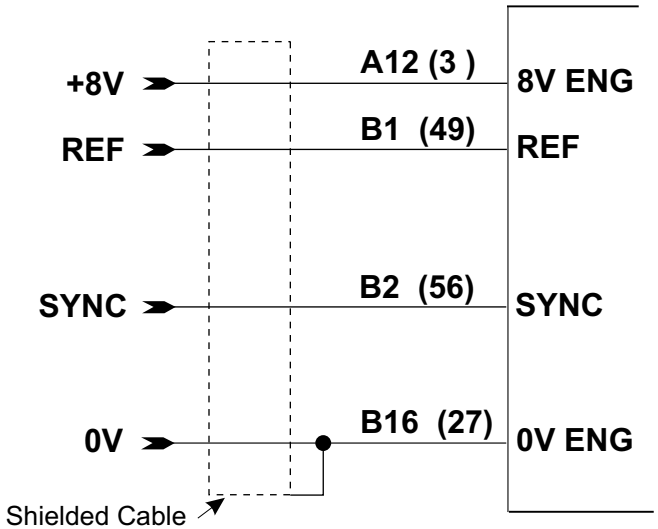

Notes

The leading edges on all teeth must be evenly spaced
The width of the Narrow Tooth must be exactly 2/3 x wide teeth
(ie. Wide Teeth are 1.5 x Narrow Tooth)
The minium Narrow Tooth is 8mm
The minium Tooth gap is 8mm
The number of teeth equals the number of cylinders
The leading edge of the Narrow Tooth must be placed at
the cranking advance point for Cylinder No 1

MoTeC	Title Narrow Tooth - General				Sheet No	Drawing No
	Date 24/09/2008	Drawn ST	App AD	Products ECU	2 of 2	T04